Appendix E Roadway Plans (all alternatives)

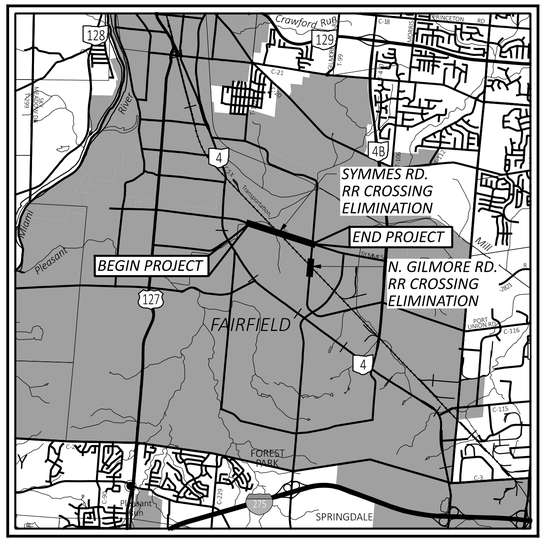

LOCATION MAP

LATITUDE: 39°20'53.89" LONGITUDE: 84°31'35.39"

N

PORTION TO BE IMPROVED
INTERSTATE HIGHWAY
FEDERAL ROUTES
STATE ROUTES
COUNTY & TOWNSHIP ROADS
OTHER ROADS

DESIGN DESIGNATION

SEE GENERAL NOTES FOR DESIGN DESIGNATIONS

DESIGN EXCEPTIONS

NONE

ADA DESIGN WAIVERS

NONE EXPECTED - WILL VERIFY IN FINAL DESIGN

UNDERGROUND UTILITIES
Contact Two Working Days Before You Dig
OHIO811.org Before You Dig
OHIO811, 8-1-1, or 1-800-362-2764
(Non members must be called directly)

PLAN PREPARED BY:

HDR ENGINEERING, INC.
9999 CARVER ROAD, SUITE 210
CINCINNATI, OHIO 45242
513-984-7500

BUTLER COUNTY TID
TRANSPORTATION IMPROVEMENT DISTRICT

FAIRFIELD
OHIO

SYMMES ROAD RAIL CROSSING ELIMINATION ALTERNATIVES

BUTLER COUNTY

INDEX OF SHEETS:

TITLE SHEET	P.1
GENERAL NOTES	P.2
TYPICAL SECTIONS	P.3
ALTERNATIVE 2:	
PLANS	P.4 - P.7
PROFILES	P.8 - P.11
CROSS SECTIONS	P.12 - P.37
STRUCTURES OVER 20'	
BRIDGE SITEPLAN	P.38
TYPICAL SECTION/ELEVATION	P.39
ALTERNATIVE 3:	
PLANS	P.40 - P.45
PROFILES	P.46 - P.49
CROSS SECTIONS	P.50 - P.73
STRUCTURES OVER 20'	
BRIDGE SITE PLAN	P.74
TYPICAL SECTION/ELEVATION	P.75
ALTERNATIVE 4:	
PLANS	P.76 - P.81
PROFILES	P.82 - P.86
CROSS SECTIONS	P.87 - P.112
STRUCTURES OVER 20'	
BRIDGE SITE PLAN	P.113
TYPICAL SECTION/ELEVATION	P.114
NORTH GILMORE	P.115

DRAFT FEASIBILITY STUDY SUBMISSION
3/31/2025
NOT FOR CONSTRUCTION

FEDERAL PROJECT NUMBER

NOT ASSIGNED

RAILROAD INVOLVEMENT

CSX RAILROAD

PROJECT DESCRIPTION

PROJECT TO ELIMINATE TWO AT GRADE HIGHWAY RAILWAY CROSSINGS. THE AT GRADE CROSSING ON SYMMES ROAD WILL BE ELIMINATED BY THE CONSTRUCTION OF A BRIDGE TO CARRY SYMMES RD OVER THE RAILWAY. THE GRADE CROSSING ON N GILMORE ROAD WILL BE ELIMINATED BY CLOSING N GILMORE ON EITHER SIDE OF THE TRACKS. THE PROJECT WILL IMPACT THE ADJACENT INTERSECTIONS OF HICKS BLVD, INDUSTRY DR, AND TEDIA WAY. THE APPROXIMATE PROJECT LENGTH IS 0.90 MILES

EARTH DISTURBED AREAS

PROJECT EARTH DISTURBED AREA:	ACRES
ESTIMATED CONTRACTOR EARTH DISTURBED AREA:	ACRES
NOTICE OF INTENT EARTH DISTURBED AREA:	ACRES

LIMITED ACCESS

THIS IMPROVEMENT IS ESPECIALLY DESIGNED FOR THROUGH TRAFFIC AND HAS BEEN DECLARED A LIMITED ACCESS HIGHWAY OR FREEWAY BY ACTION OF THE DIRECTOR IN ACCORDANCE WITH THE PROVISIONS OF SECTION 5511.02 OF THE OHIO REVISED CODE.

2023 SPECIFICATIONS

THE STANDARD SPECIFICATIONS OF THE STATE OF OHIO, DEPARTMENT OF TRANSPORTATION, INCLUDING SUPPLEMENTAL SPECIFICATIONS LISTED IN THE PLANS, CHANGES LISTED IN THE PROPOSAL, AND THE SUPPLEMENTAL SPECIFICATION 800 VERSION INDICATED ON THE PROPOSAL SHALL GOVERN THIS IMPROVEMENT.

SYMMES RD - ALTERNATIVES

DESIGN AGENCY
HDR

DESIGNER
MJL

REVIEWER
PJD 02/21/25

PROJECT ID
SYMMES RD

SHEET P.1 TOTAL 115

BUT-SYMMES

MODEL: Sheet PAPERSIZE: 34x22 (in.) DATE: 3/31/2025 TIME: 2:00:37 PM USER: MLORENZ
pw:\\pwhdruseas01:HDR_US_East_01\Documents\Butler_County_Transportation_Improvement_District_-_Ohio\BCTID-SymmesRd_Grd_Separation\6.0_CAD_BIM\6.2_WIP\01_Design\000000\400-Engineering\Roadway\Sheets\Alternative Title Sheet

UTILITIES

LISTED BELOW ARE ALL UTILITIES LOCATED WITHIN THE PROJECT CONSTRUCTION LIMITS TOGETHER WITH THEIR RESPECTIVE OWNERS:

GAS:
BP PIPELINES (NORTH AMERICA) INC.
30 SOUTH WACKER DRIVE
SUITE 900
CHICAGO, IL 60606
312-766-2430

DUKE ENERGY GAS RECORDS
139 E. FOURTH ST.
CINCINNATI, OHIO 45202
MARK BRANSCUM

TEXAS GAS TRANSMISSION, LLC
3223 HART ROAD
LEBANON, OHIO 45036
513-932-7786

WATER:
CITY OF FAIRFIELD PUBLIC UTILITIES DEPT.
5021 GROH LANE
FAIRFIELD, OHIO 45014

SANITARY:
CITY OF FAIRFIELD PUBLIC UTILITIES DEPT.
4799 GROH LANE
FAIRFIELD, OHIO 45014
513-858-7760

ELECTRIC:
DUKE ENERGY ELECTRIC RECORDS
2010 DANA AVE
CINCINNATI, OHIO 45207
GORDON THOMPSON

TELEPHONE:
CINCINNATI BELL
201 E. FOURTH STREET, BLDG 343
CINCINNATI, OHIO 45202

CABLE:
CHARTER-TIME WARNER
10920 KENWOOD ROAD
BLUE ASH, OHIO 45242

FIBER OPTICS:
ALTAFIBER

Design Designations

Design Designation	*Symmes Rd*	*S.R. 4 (Dixie Hwy)*	*Hicks Blvd*	*Industry Dr*	*Tedia Way*	*N Gilmore Rd*	*Reference*
Current ADT (2028)	*14,450*	*25,960*	*3,250*	*1,910*	*580*	*6,850*	*Design Traffic*
Design Year ADT (2048)	*15,970*	*28,690*	*3,600*	*2,110*	*640*	*7,570*	*Design Traffic*
Design Hourly Volume (2048)	*1,690*	*2,530*	*390*	*200*	*120*	*240*	*Design Traffic*
Directional Distribution	*74%*	*62%*	*67%*	*65%*	*50%*	*50%*	*Design Traffic*
Trucks (24 hour B&C)	*4%*	*3%*	*2%*	*2%*	*2%*	*2%*	*Design Traffic*
Design Speed	*40*	*40*	*30*	*30*	*30*	*30*	*L&D Section 104.2*
Legal Speed	*35*	*35*	*25*	*25*	*25*	*35*	*Posted Speed Limit*
Design Functional Classification	*Urban Minor Arterial*	*Urban Principal Arterial*	*Local*	*Local*	*Local*	*Urban Minor Arterial*	*ODOT Functional Classification Maps*
NHS Project	*No*	*Yes*	*No*	*No*	*No*	*No*	*FHWA National Highway System - Ohio*

SYMMES ROAD - GENERAL NOTES

DESIGN AGENCY

HDR

DESIGNER
MJL

REVIEWER
PJD 02/21/25

PROJECT ID
SYMMES RD

SHEET P.2 TOTAL 115

LEGEND

1. ITEM 441 - 1¼" ASPHALT CONCRETE SURFACE COURSE, TYPE 1, PG 64-22, (449)
2. ITEM 441 - 1¾" ASPHALT CONCRETE INTERMEDIATE COURSE, TYPE 1, (449)
3. ITEM 301 - 8" ASPHALT CONCRETE BASE COURSE
4. ITEM 304 - 6" AGGREGATE BASE COURSE
5. ITEM 206 - CEMENT STABILZED SUBGRADE, 14" DEEP
6. ITEM 407 - NON-TRACKING TACK COAT
7. ITEM 204 - SUBGRADE COMPACTION AND PROOF ROLLING
8. ITEM 609 - CURB AND GUTTER, TYPE 2
9. ITEM 659 - SEEDING AND MULCHING
10. ITEM 608 - 4" CONCRETE WALK
11. ITEM 823 - ASPHALT SHARED USE PATH
12. ITEM 609 - CURB, TYPE 9
13. ITEM 609 - CURB, TYPE 6
14. ITEM 452 - 9" NON-REINFORCED CONCRETE PAVEMENT TRUCK APRON
15. ITEM 609 - CURB, TYPE 3
16. ITEM 609 - 6" CONCRETE TRAFFIC ISLAND
17. ITEM 605 - 4" PIPE BASE UNDERDRAINS, (18" - TBD)

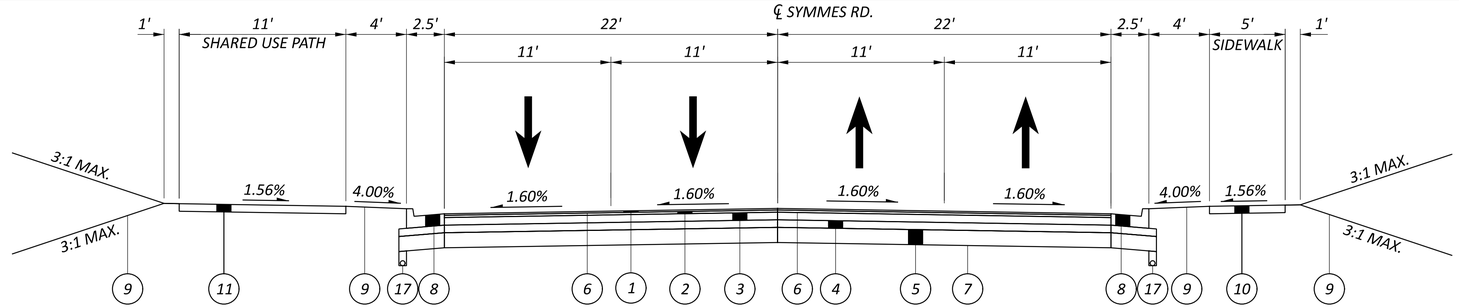

PROPOSED 4 LANE SECTION

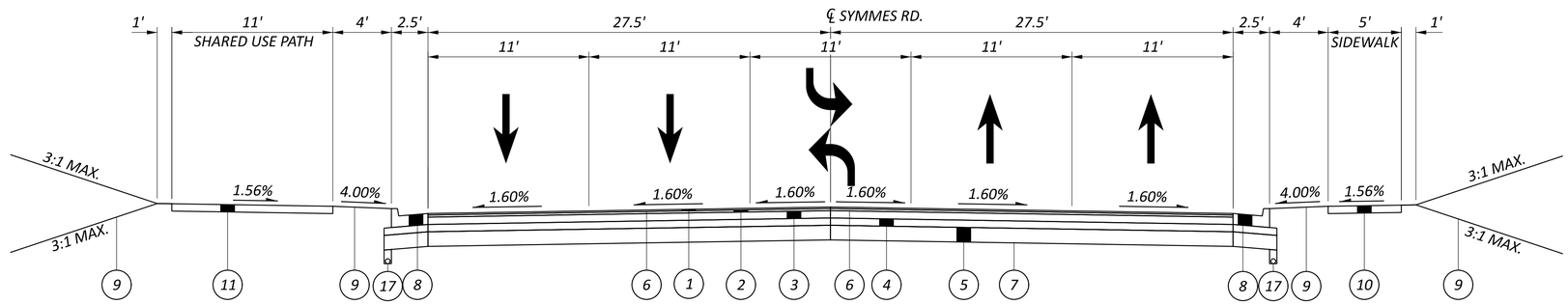

PROPOSED 5 LANE SECTION

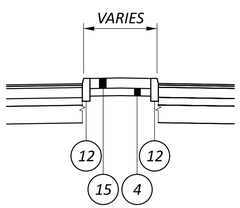

SPLITTER ISLAND DETAIL

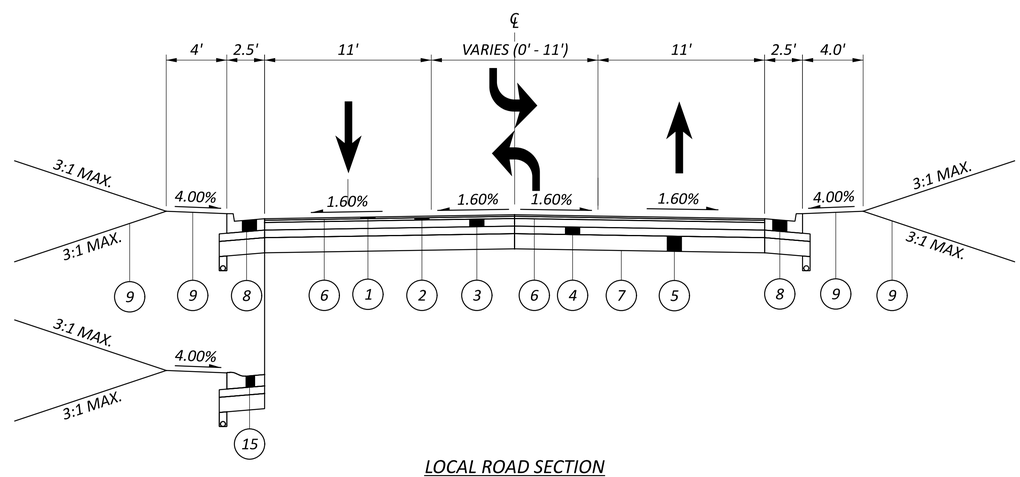

LOCAL ROAD SECTION

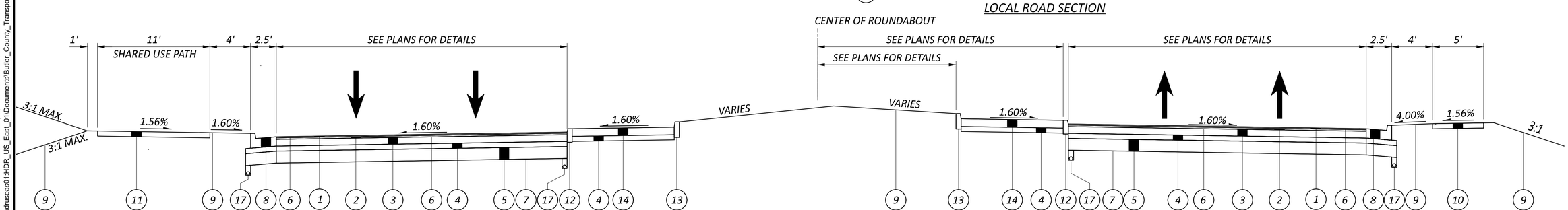

ROUNDABOUT SECTION

SYMMES ROAD - TYPICAL SECTIONS

BUT-SYMMES

MODEL: Sheet PAPERSIZE: 34x22 (in.) DATE: 3/31/2025 TIME: 2:00:57 PM USER: MLORENZ
pw:\\pwhdruseas01:HDR_US_East_01\Documents\Butler_County_Transportation_Improvement_District_-_Ohio\BCTID-SymmesRd_Grd_Separation\6.0_CAD_BIM\6.2_WIP\01_Design\0000000400-Engineering\Roadway\Sheets\Alt 2 Typical Sections

DESIGN AGENCY	HDR
DESIGNER	MJL
REVIEWER	PJD 02/21/25
PROJECT ID	SYMMES RD
SHEET	P.3
TOTAL	115

HORIZONTAL SCALE IN FEET
0 20 40 80

PLAN - ALTERNATIVE 2
SYMMES RD -BEGIN PROJECT TO STA. 217+00

DESIGN AGENCY
HDR

DESIGNER
MJL

REVIEWER
PJD 02/21/25

PROJECT ID
SYMMES RD

SHEET P.4 TOTAL 115

BUT-SYMMES

MODEL: 00000_GP201 PAPERSIZE: 34x22 (in.) DATE: 3/31/2025 TIME: 2:01:19 PM USER: MLORENZ
pw:\\pwhdruseas01:HDR_US_East_01\Documents\Butler_County_Transportation_Improvement_District_-_Ohio\BCTID-SymmesRd_Grd_Separation\6.0_CAD_BIM\6.2_WIP\01_Design\000000\400-Engineering\Roadway\Sheets\Alt 2 Roadway Plan 1

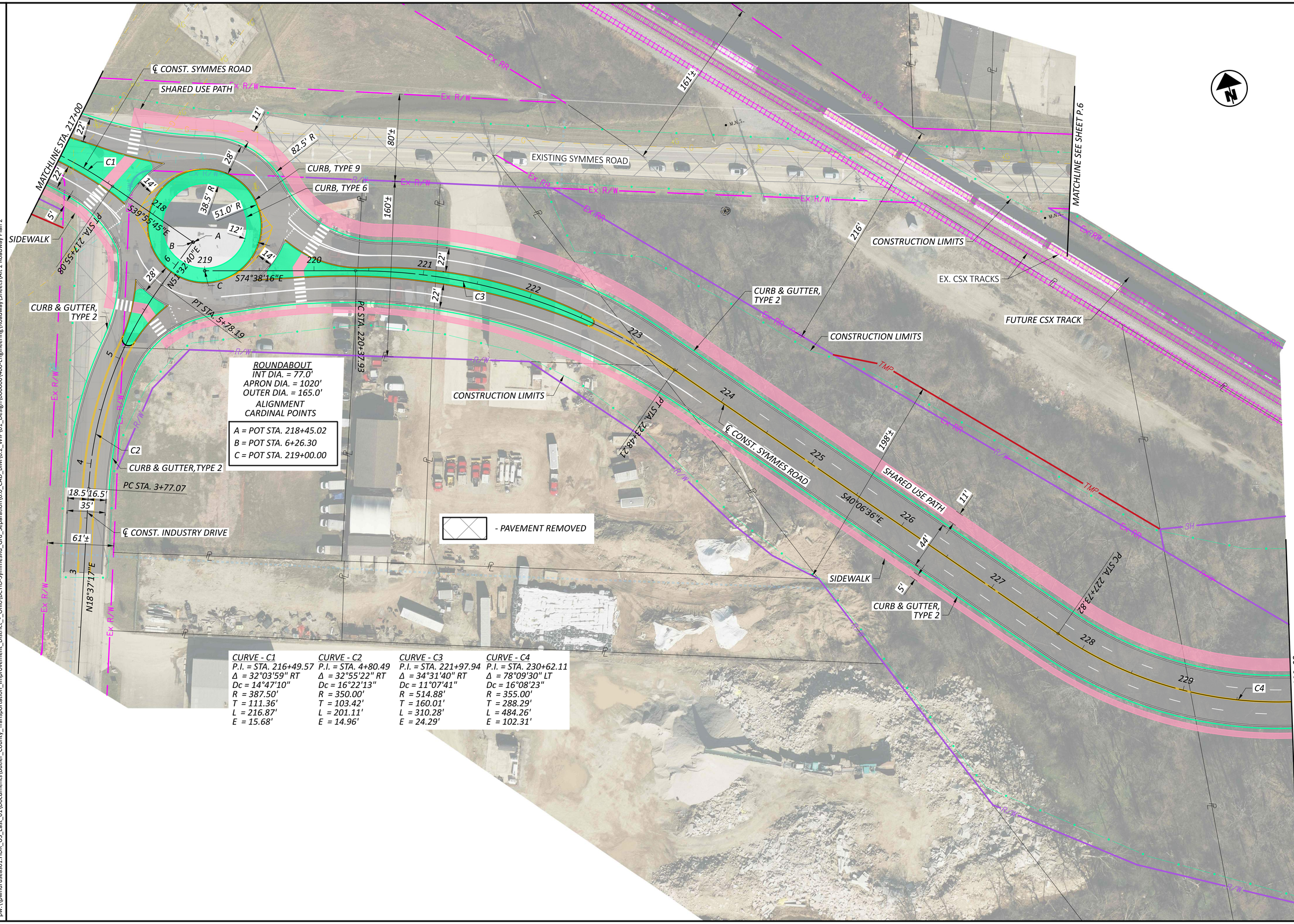

ROUNDABOUT
INT DIA. = 77.0'
APRON DIA. = 1020'
OUTER DIA. = 165.0'
ALIGNMENT CARDINAL POINTS

A = POT STA. 218+45.02
B = POT STA. 6+26.30
C = POT STA. 219+00.00

CURVE - C1	CURVE - C2	CURVE - C3	CURVE - C4
P.I. = STA. 216+49.57	P.I. = STA. 4+80.49	P.I. = STA. 221+97.94	P.I. = STA. 230+62.11
Δ = 32°03'59" RT	Δ = 32°55'22" RT	Δ = 34°31'40" RT	Δ = 78°09'30" LT
Dc = 14°47'10"	Dc = 16°22'13"	Dc = 11°07'41"	Dc = 16°08'23"
R = 387.50'	R = 350.00'	R = 514.88'	R = 355.00'
T = 111.36'	T = 103.42'	T = 160.01'	T = 288.29'
L = 216.87'	L = 201.11'	L = 310.28'	L = 484.26'
E = 15.68'	E = 14.96'	E = 24.29'	E = 102.31'

HORIZONTAL SCALE IN FEET
0 20 40 80

PLAN - ALTERNATIVE 2
SYMMES RD - STA. 217+00 TO STA. 230+00

DESIGN AGENCY
HDR

DESIGNER
MJL

REVIEWER
PJD 02/21/25

PROJECT ID
SYMMES RD

SHEET P.5 TOTAL 115

BUT-SYMMES

MODEL: 00000_GP202 PAPERSIZE: 34x22 (in.) DATE: 3/31/2025 TIME: 2:01:33 PM USER: MLORENZ
pw:\\pwhdruseas01:HDR_US_East_01\Documents\Butler_County_Transportation_Improvement_District_-_Ohio\BCTID-SymmesRd_Grd_Separation\6.0_CAD_BIM\6.2_WIP\01_Design\000000\400-Engineering\Roadway\Sheets\Alt 2 Roadway Plan 2

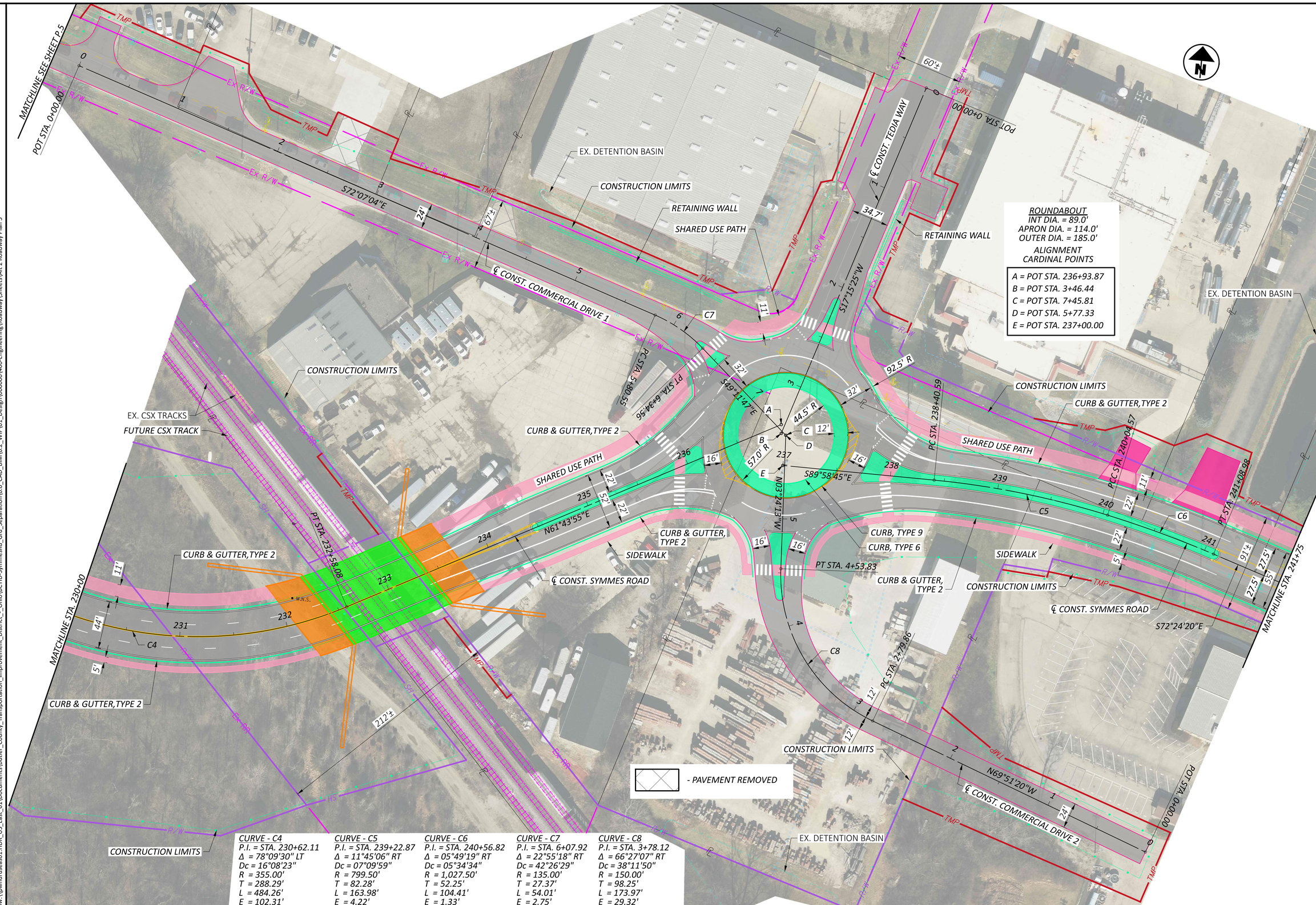

CURVE - C4	CURVE - C5	CURVE - C6	CURVE - C7	CURVE - C8
P.I. = STA. 230+62.11	P.I. = STA. 239+22.87	P.I. = STA. 240+56.82	P.I. = STA. 6+07.92	P.I. = STA. 3+78.12
Δ = 78°09'30" LT	Δ = 11°45'06" RT	Δ = 05°49'19" RT	Δ = 22°55'18" RT	Δ = 66°27'07" RT
Dc = 16°08'23"	Dc = 07°09'59"	Dc = 05°34'34"	Dc = 42°26'29"	Dc = 38°11'50"
R = 355.00'	R = 799.50'	R = 1,027.50'	R = 135.00'	R = 150.00'
T = 288.29'	T = 82.28'	T = 52.25'	T = 27.37'	T = 98.25'
L = 484.26'	L = 163.98'	L = 104.41'	L = 54.01'	L = 173.97'
E = 102.31'	E = 4.22'	E = 1.33'	E = 2.75'	E = 29.32'

PLAN - ALTERNATIVE 2
SYMMES RD - STA. 230+00 TO STA. 241+75

DESIGN AGENCY: HDR

DESIGNER: MJL
REVIEWER: PJD 02/21/25
PROJECT ID: SYMMES RD
SHEET: P.6 TOTAL: 115

BUT-SYMMES

MODEL: 00000_GP203 PAPERSIZE: 34x22 (in.) DATE: 3/31/2025 TIME: 2:01:49 PM USER: MLORENZ
pw:\\pwhdruseas01:HDR_US_East_01\Documents\Butler_County_Transportation_Improvement_District_-_Ohio\BCTID-SymmesRd_Grd_Separation\6.0_CAD_BIM\6.2_WIP\01_Design\000000\400-Engineering\Roadway\Sheets\Alt 2 Roadway Plan 3

HORIZONTAL SCALE IN FEET
0 20 40 80

PLAN - ALTERNATIVE 2
SYMMES RD - STA. 241+75 TO END PROJECT

DESIGN AGENCY
HDR

DESIGNER
MJL

REVIEWER
PJD 02/21/25

PROJECT ID
SYMMES RD

SHEET P.7 TOTAL 115

BUT-SYMMES

MODEL: 00000_GP204 PAPERSIZE: 34x22 (in.) DATE: 3/31/2025 TIME: 2:02:02 PM USER: MLORENZ
pw:\\pwhdruseas01:HDR_US_East_01\Documents\Butler_County_Transportation_Improvement_District_-_Ohio\BCTID-SymmesRd_Grd_Separation\6.0_CAD_BIM\6.2_WIP\01_Design\000000\400-Engineering\Roadway\Sheets\Alt 2 Roadway Plan 4

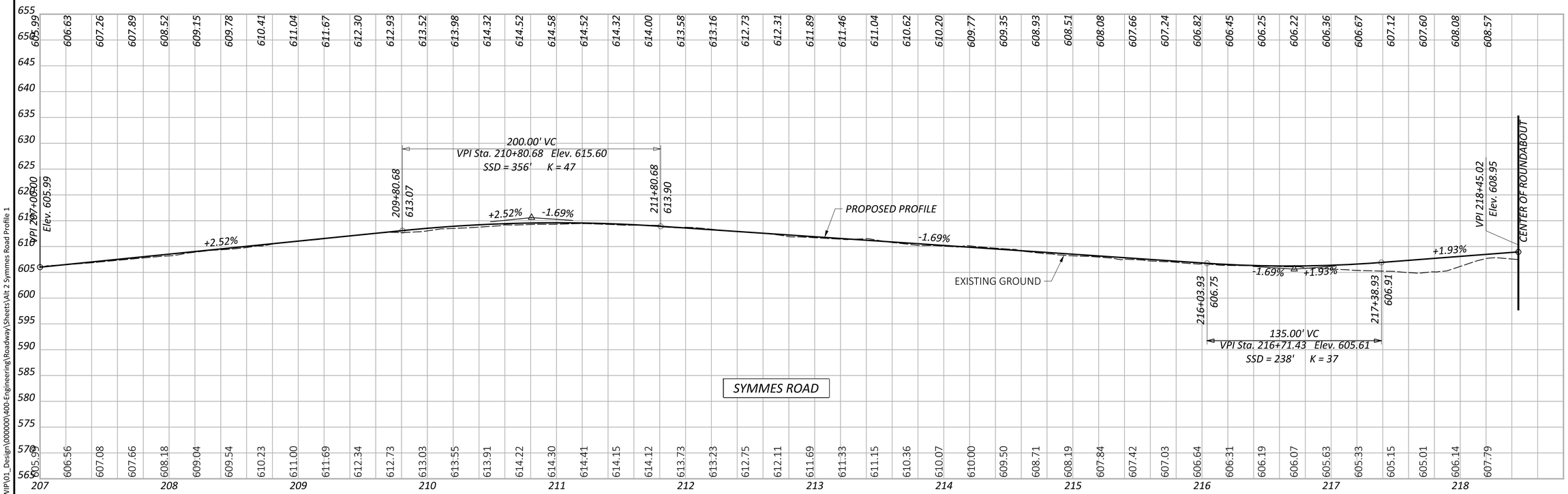

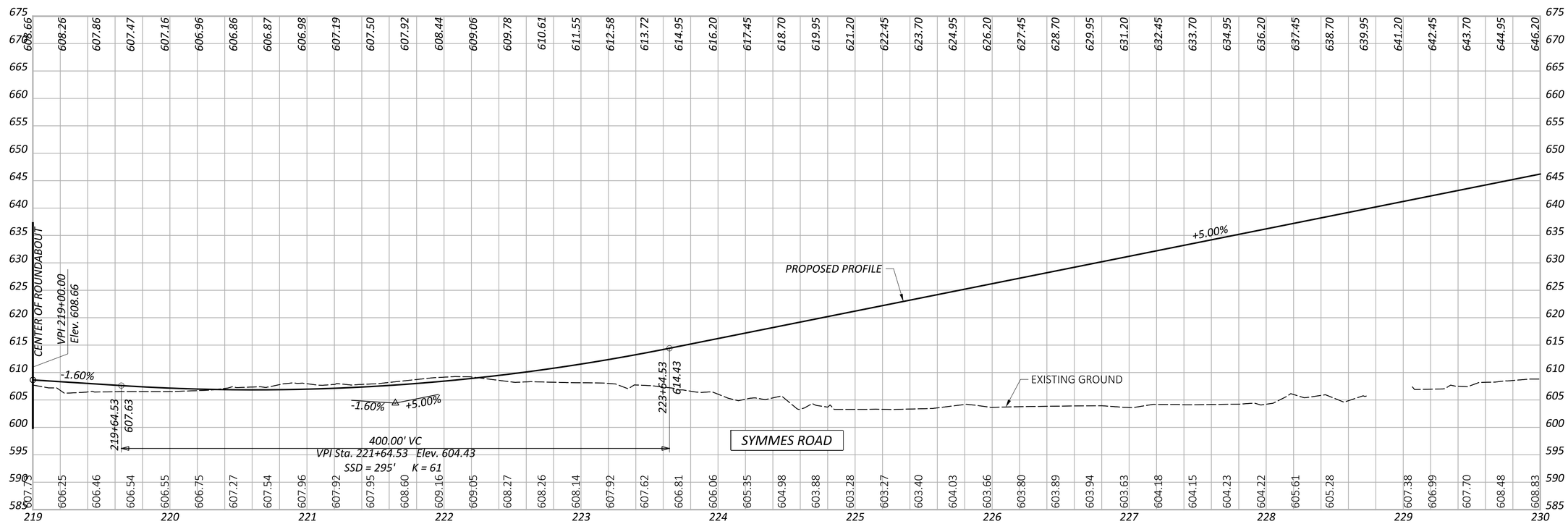

PROFILE - ALTERNATIVE 2
SYMMES ROAD

DESIGN AGENCY

HDR

DESIGNER
MJL

REVIEWER
PJD 02/21/25

PROJECT ID
SYMMES RD

SHEET P.8 TOTAL 115

BUT-SYMMES

MODEL: 00000_GF201 PAPERSIZE: 34x22 (in.) DATE: 3/31/2025 TIME: 2:02:16 PM USER: MLORENZ
pw:\\pwhdruseas01:HDR_US_East_01\Documents\Butler_County_Transportation_Improvement_District_-_Ohio\BCTID-SymmesRd_Grd_Separation\6.0_CAD_BIM\6.2_WIP\01_Design\000000\400-Engineering\Roadway\Sheets\Alt 2 Symmes Road Profile 1

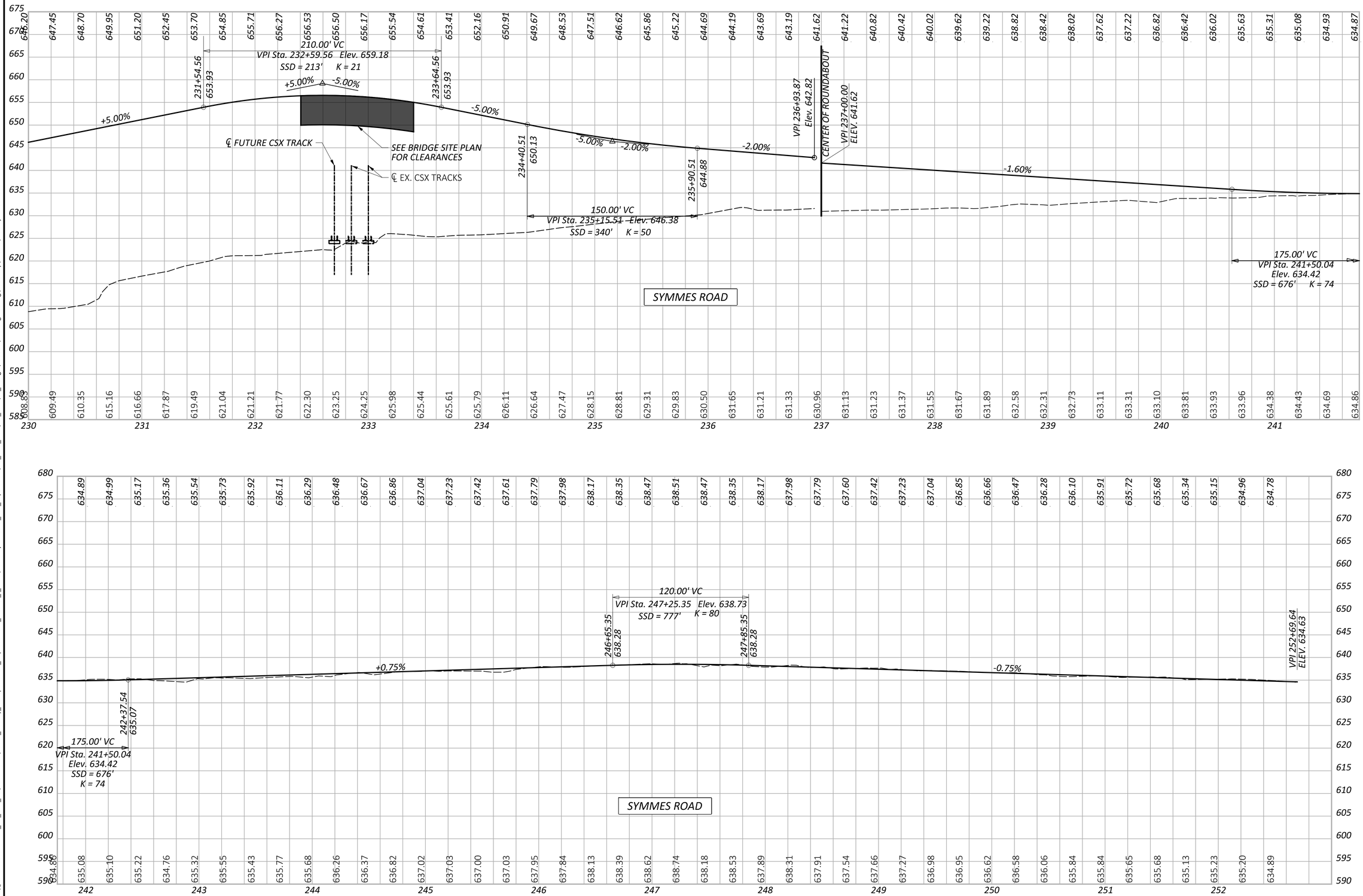

PROFILE - ALTERNATIVE 2
SYMMES ROAD

BUT-SYMMES

MODEL: 00000_GF202 PAPERSIZE: 34x22 (in.) DATE: 3/31/2025 TIME: 2:02:25 PM USER: MLORENZ
pw:\\pwhdruseas01:HDR_US_East_01\Documents\Butler_County_Transportation_Improvement_District_-_Ohio\BCTID-SymmesRd_Grd_Separation\6.0_CAD_BIM\6.2_WIP\01_Design\000000\400-Engineering\Roadway\Sheets\Alt 2 Symmes Road Profile 2

DESIGN AGENCY

HDR

DESIGNER
MJL

REVIEWER
PJD 02/21/25

PROJECT ID
SYMMES RD

SHEET P.9 TOTAL 115

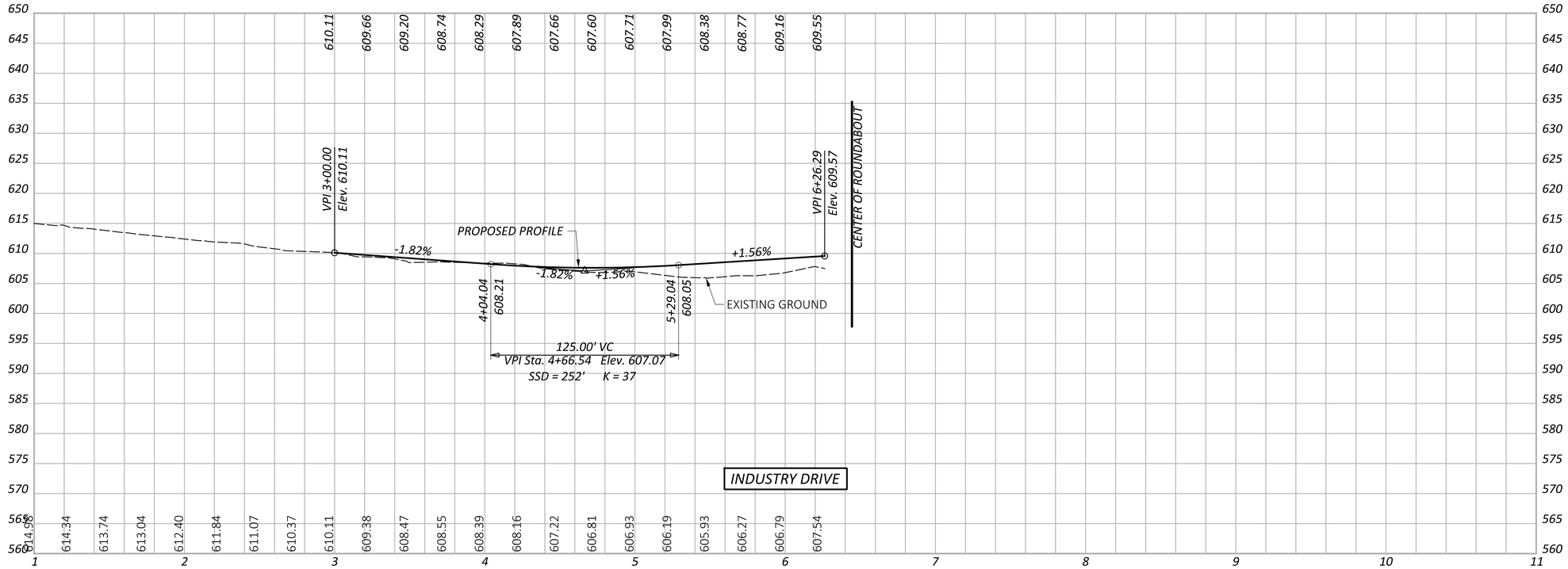

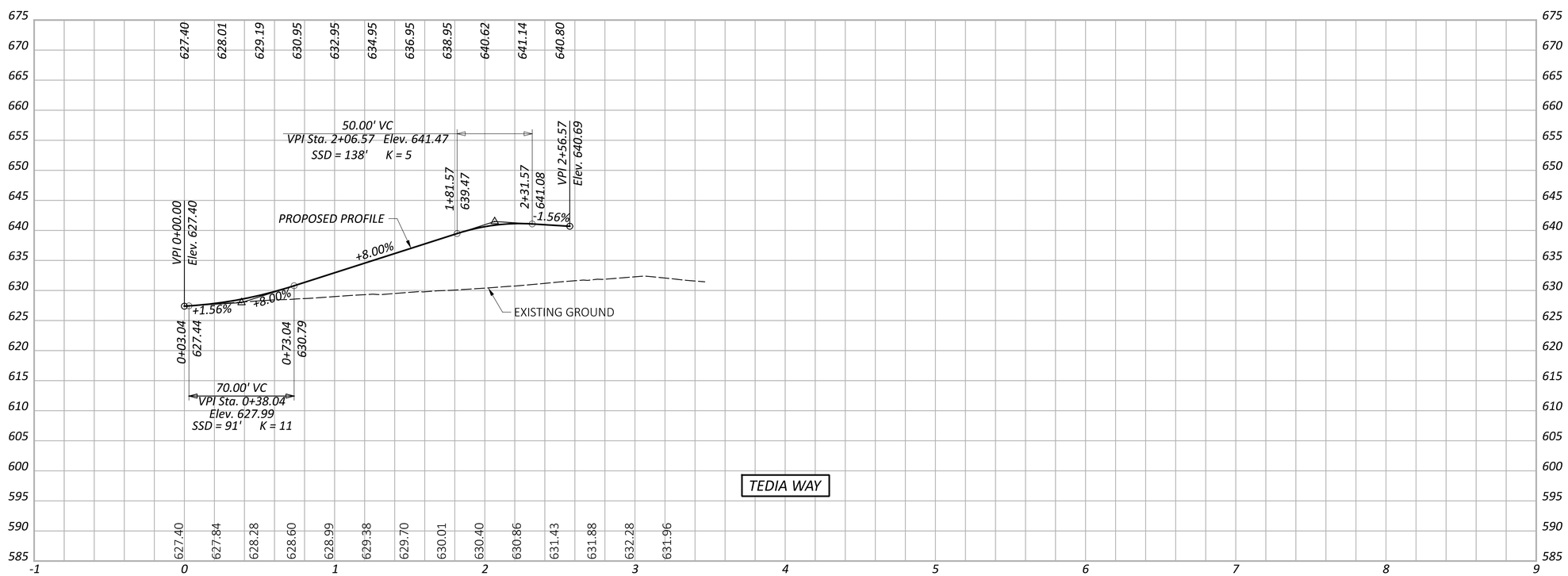

PROFILE - ALTERNATIVE 2
INDUSTRY DRIVE & TEDIA WAY

DESIGN AGENCY

HDR

DESIGNER
MJL

REVIEWER
PJD 02/21/25

PROJECT ID
SYMMES RD

SHEET P.10 TOTAL 115

BUT-SYMMES

MODEL: 00000_GF203 PAPERSIZE: 34x22 (in.) DATE: 3/31/2025 TIME: 2:02:35 PM USER: MLORENZ
pw:\\pwhdruseas01:HDR_US_East_01\Documents\Butler_County_Transportation_Improvement_District_-_Ohio\BCTID-SymmesRd_Grd_Separation\6.0_CAD_BIM\6.2_WIP\01_Design\000000\400-Engineering\Roadway\Sheets\Alt 2 Indistry - Tedia Road Profiles

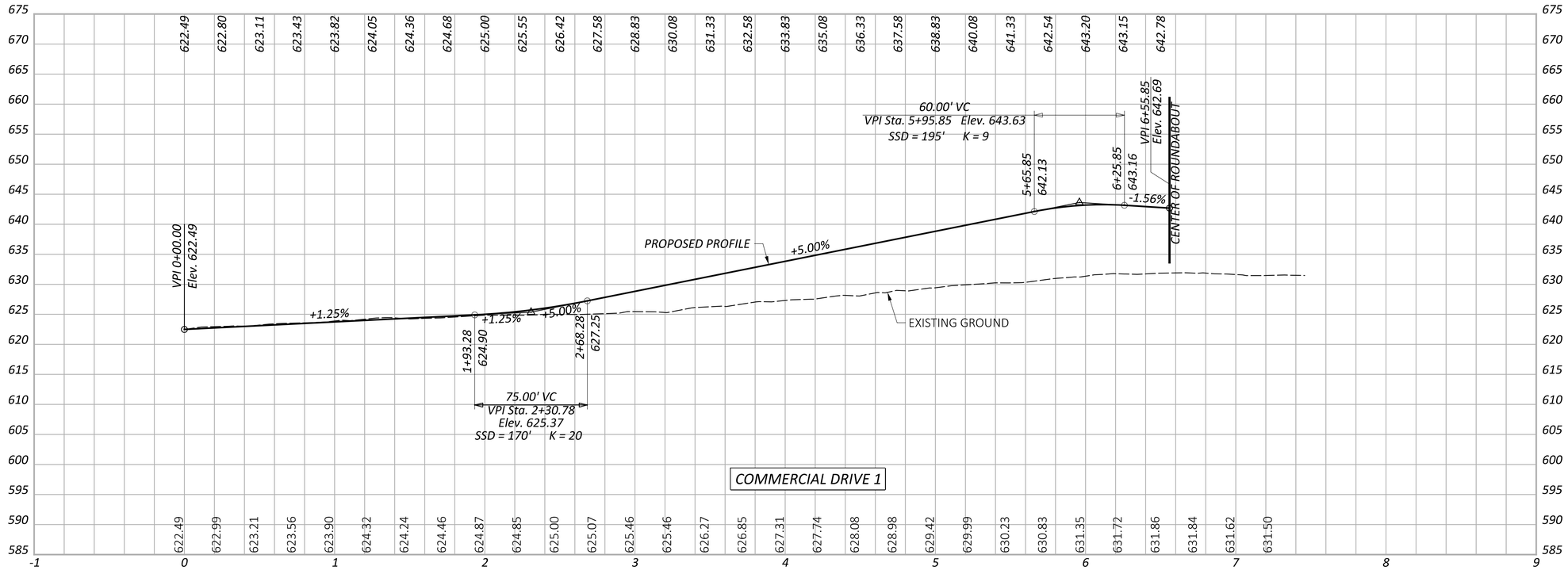

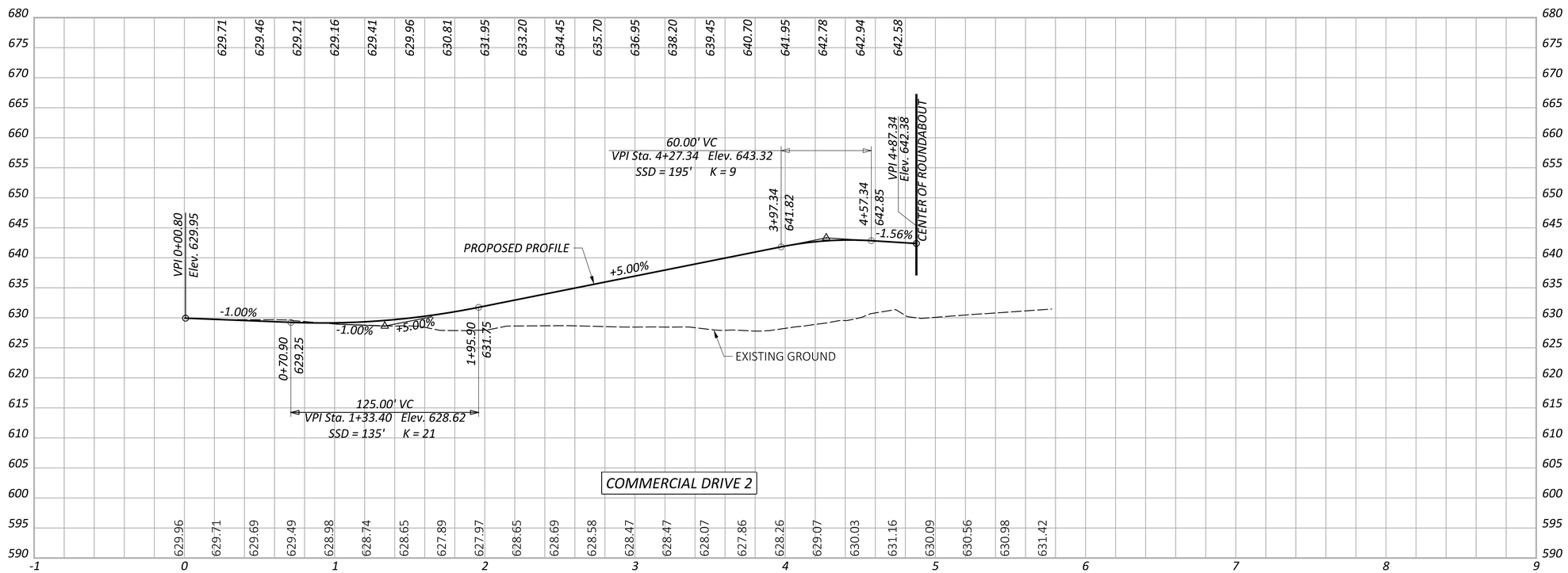

PROFILE - ALTERNATIVE 2
COMMERCIAL DRIVE 1 & 2

DESIGN AGENCY

HDR

DESIGNER
MJL

REVIEWER
PJD 02/21/25

PROJECT ID
SYMMES RD

SHEET P.11 TOTAL 115

BUT-SYMMES

MODEL: 00000_GF204 PAPERSIZE: 34x22 (in.) DATE: 3/31/2025 TIME: 2:02:44 PM USER: MLORENZ
pw:\\pwhdruseas01:HDR_US_East_01\Documents\Butler_County_Transportation_Improvement_District_-_Ohio\BCTID-SymmesRd_Grd_Separation\6.0_CAD_BIM\6.2_WIP\01_Design\000000\400-Engineering\Roadway\Sheets\Alt 2 Roadway Drive Profiles

Cut Area (SF): 0	Cut Vol. (CY): 0
Fill Area (SF): 0	Fill Vol. (CY): 0
Seed Width (FT):	Seed Area (SY):

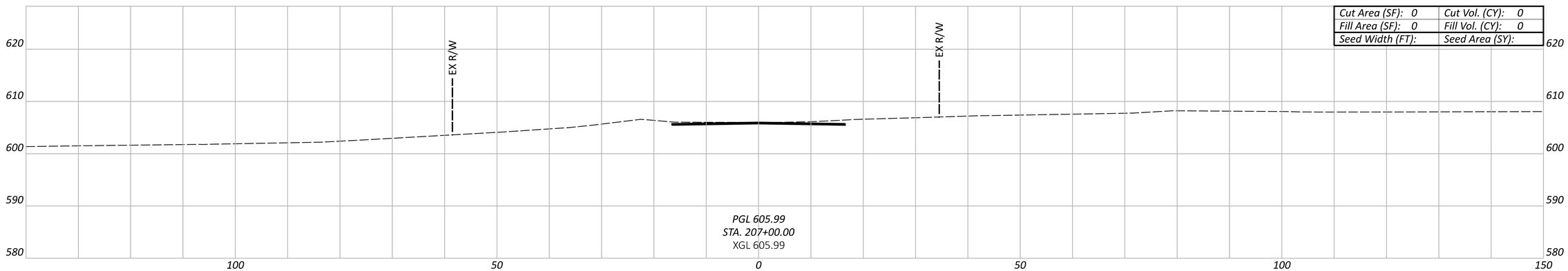

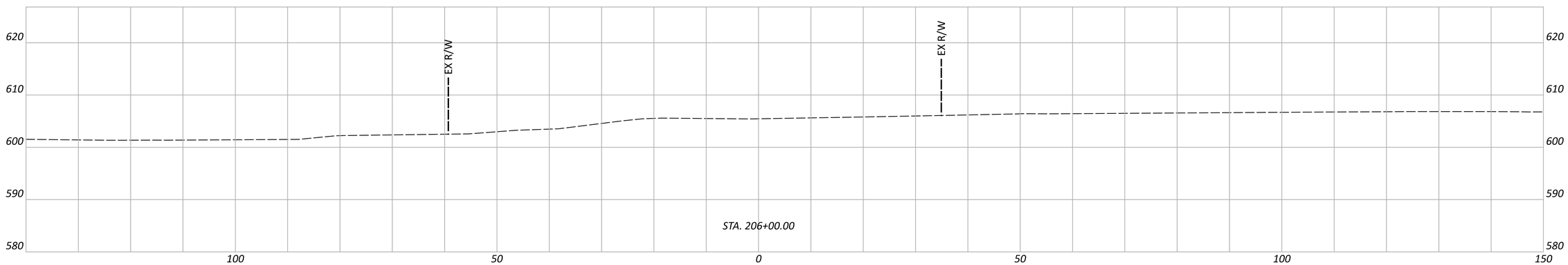

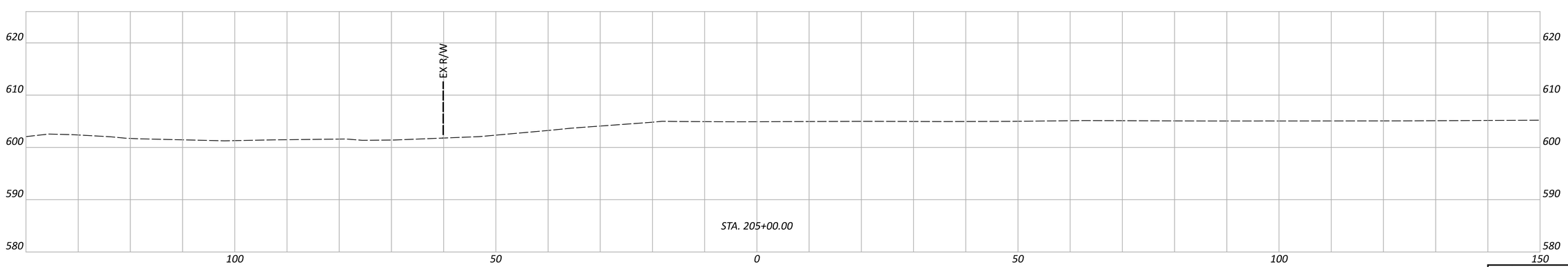

Sheet Totals		
Seeding	Cut	Fill

CROSS SECTIONS - ALTERNATIVE 2
SYMMES RD. - STA. 205+00 TO STA. 207+00

DESIGN AGENCY

HDR

DESIGNER
MJL

REVIEWER
PJD 02/21/25

PROJECT ID
SYMMES RD

SHEET P.12 TOTAL 115

BUT-SYMMES

MODEL: 00000_GX201 PAPERSIZE: 34x22 (in.) DATE: 3/31/2025 TIME: 2:02:54 PM USER: MLORENZ
pw:\\pwhdruseas01:HDR_US_East_01\Documents\Butler_County_Transportation_Improvement_District_-_Ohio\BCTID-SymmesRd_Grd_Separation\6.0_CAD_BIM\6.2_WIP\01_Design\000000\400-Engineering\Roadway\Sheets\Alt2 Symmes Road Cross Sections

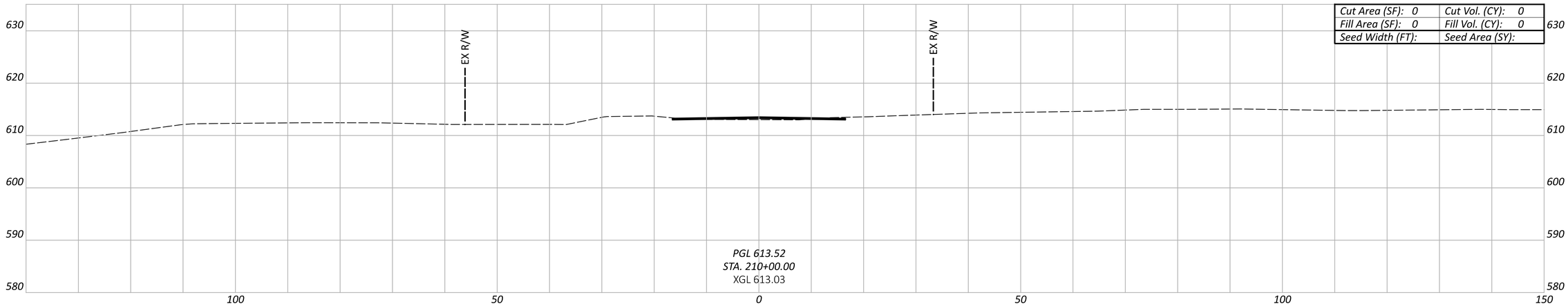

Cut Area (SF): 0	Cut Vol. (CY): 0
Fill Area (SF): 0	Fill Vol. (CY): 0
Seed Width (FT):	Seed Area (SY):

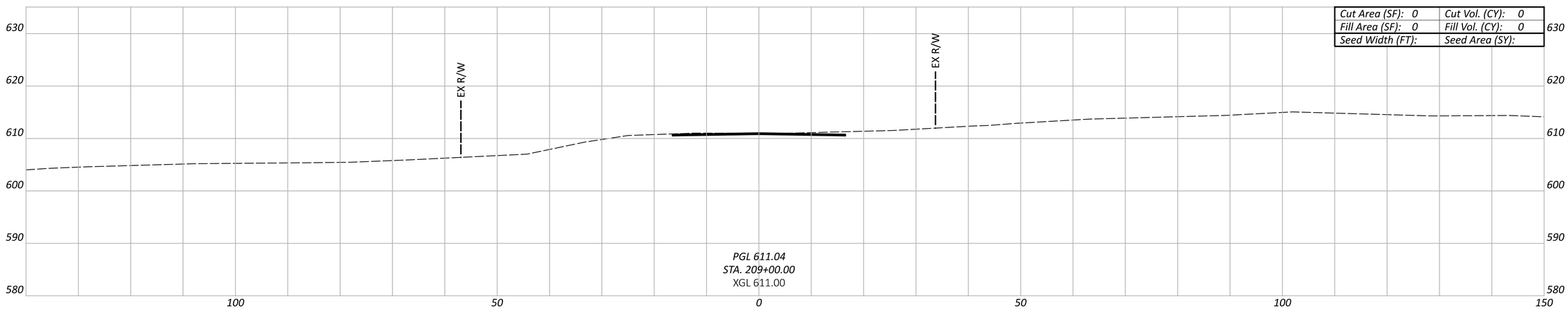

Cut Area (SF): 0	Cut Vol. (CY): 0
Fill Area (SF): 0	Fill Vol. (CY): 0
Seed Width (FT):	Seed Area (SY):

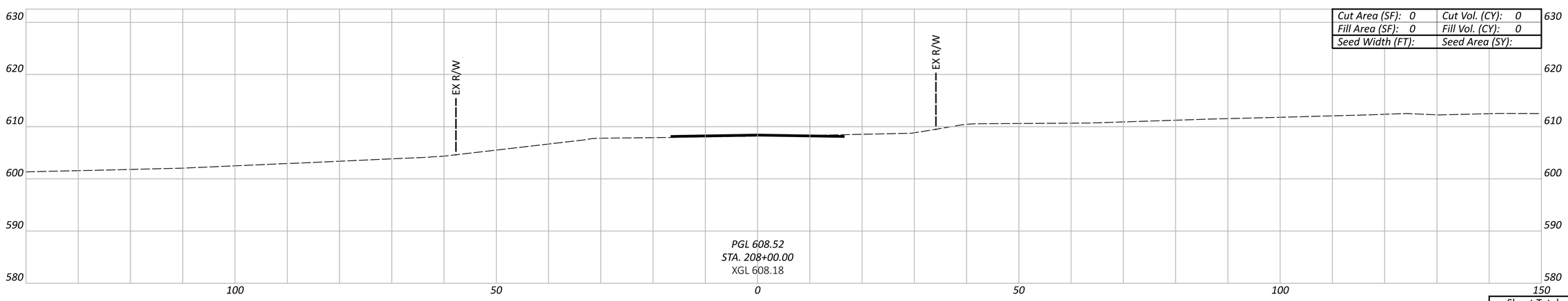

Cut Area (SF): 0	Cut Vol. (CY): 0
Fill Area (SF): 0	Fill Vol. (CY): 0
Seed Width (FT):	Seed Area (SY):

Sheet Totals		
Seeding	Cut	Fill

CROSS SECTIONS - ALTERNATIVE 2
SYMMES RD. - STA. 208+00 TO STA. 210+00

DESIGN AGENCY

HDR

DESIGNER
MJL

REVIEWER
PJD 02/21/25

PROJECT ID
SYMMES RD

SHEET P.13 TOTAL 115

BUT-SYMMES

MODEL: 00000_GX202 PAPERSIZE: 34x22 (in.) DATE: 3/31/2025 TIME: 2:02:57 PM USER: MLORENZ
pw:\\pwhdruseas01:HDR_US_East_01\Documents\Butler_County_Transportation_Improvement_District_-_Ohio\BCTID-SymmesRd_Grd_Separation\6.0_CAD_BIM\6.2_WIP\01_Design\000000\400-Engineering\Roadway\Sheets\Alt2 Symmes Road Cross Sections

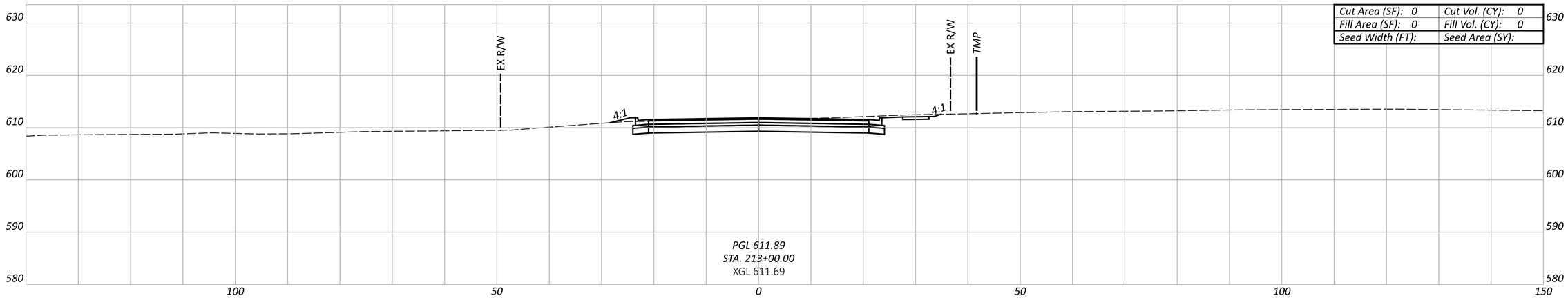

Cut Area (SF): 0	Cut Vol. (CY): 0
Fill Area (SF): 0	Fill Vol. (CY): 0
Seed Width (FT):	Seed Area (SY):

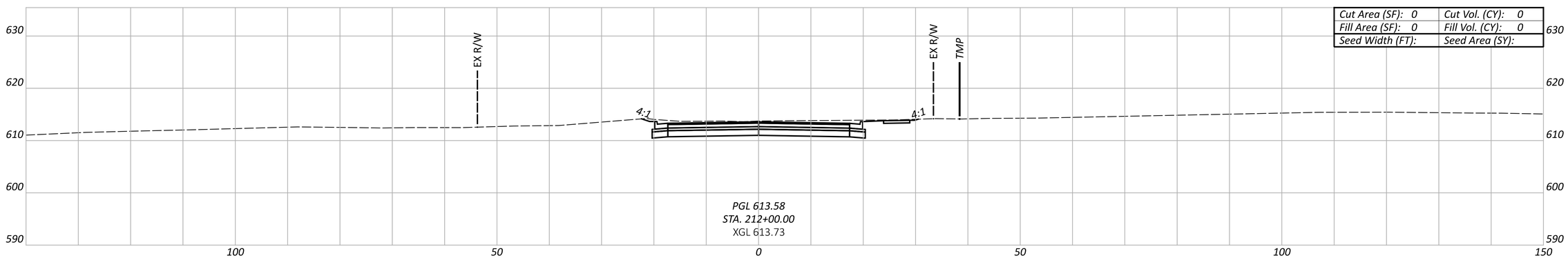

Cut Area (SF): 0	Cut Vol. (CY): 0
Fill Area (SF): 0	Fill Vol. (CY): 0
Seed Width (FT):	Seed Area (SY):

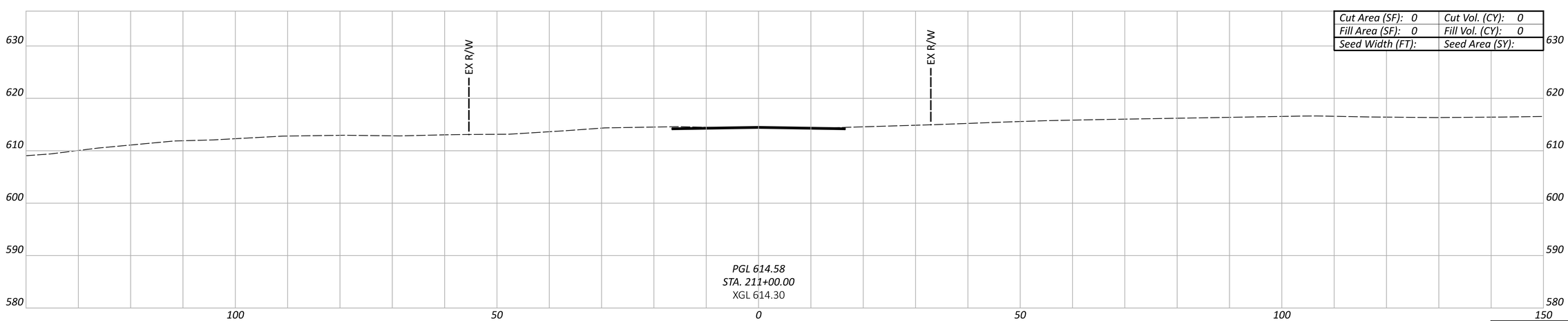

Cut Area (SF): 0	Cut Vol. (CY): 0
Fill Area (SF): 0	Fill Vol. (CY): 0
Seed Width (FT):	Seed Area (SY):

Sheet Totals		
Seeding	Cut	Fill

CROSS SECTIONS - ALTERNATIVE 2
SYMMES RD. - STA. 211+00 TO STA. 213+00

DESIGN AGENCY

DESIGNER
MJL

REVIEWER
PJD 02/21/25

PROJECT ID
SYMMES RD

SHEET P.14 TOTAL 115

BUT-SYMMES

MODEL: 00000_GX203 PAPERSIZE: 34x22 (in.) DATE: 3/31/2025 TIME: 2:03:00 PM USER: MLORENZ
pw:\\pwhdruseas01:HDR_US_East_01\Documents\Butler_County_Transportation_Improvement_District_-_Ohio\BCTID-SymmesRd_Grd_Separation\6.0_CAD_BIM\6.2_WIP\01_Design\000000\400-Engineering\Roadway\Sheets\Alt2 Symmes Road Cross Sections

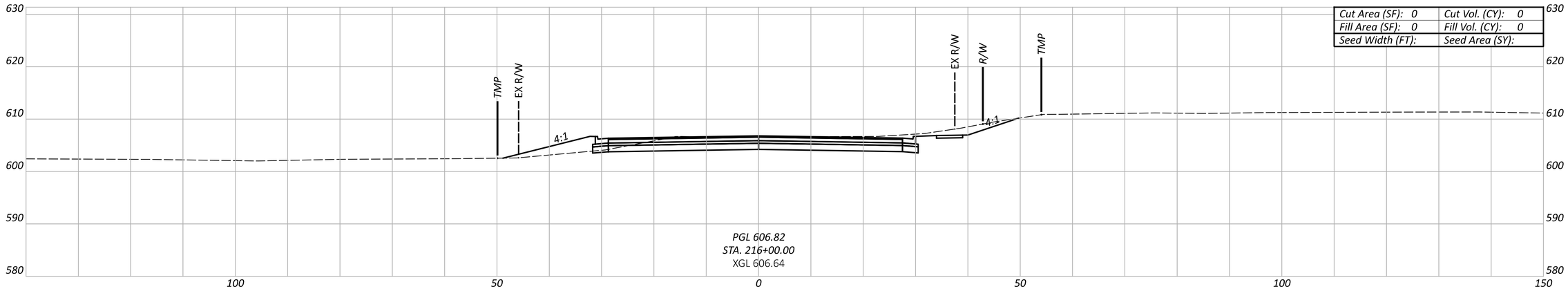

Cut Area (SF): 0	Cut Vol. (CY): 0
Fill Area (SF): 0	Fill Vol. (CY): 0
Seed Width (FT):	Seed Area (SY):

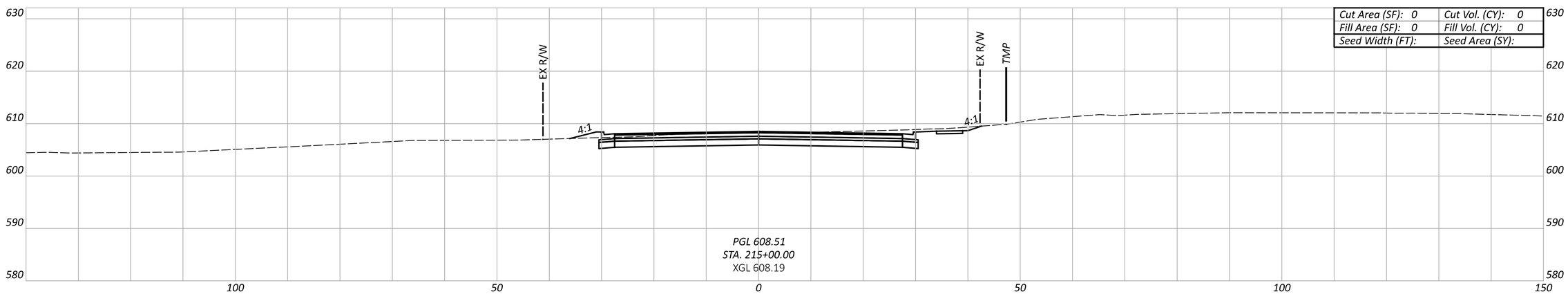

Cut Area (SF): 0	Cut Vol. (CY): 0
Fill Area (SF): 0	Fill Vol. (CY): 0
Seed Width (FT):	Seed Area (SY):

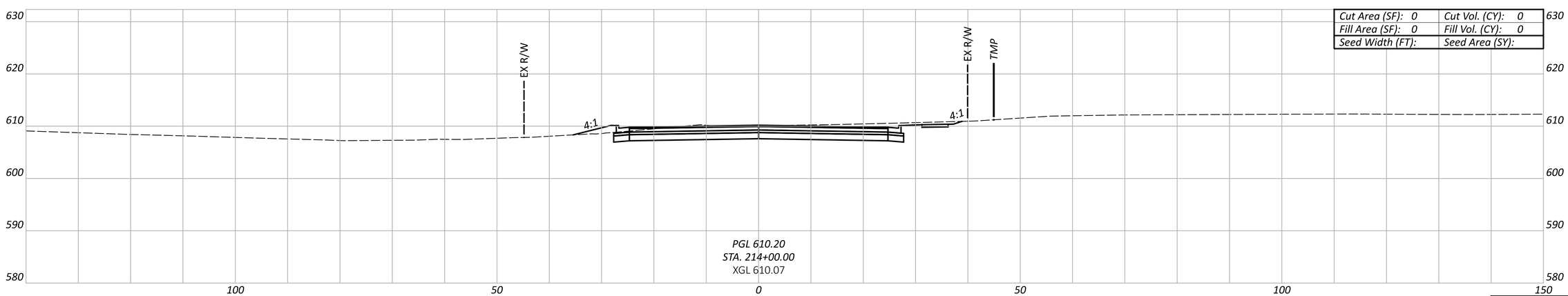

Cut Area (SF): 0	Cut Vol. (CY): 0
Fill Area (SF): 0	Fill Vol. (CY): 0
Seed Width (FT):	Seed Area (SY):

Sheet Totals		
Seeding	Cut	Fill

CROSS SECTIONS - ALTERNATIVE 2
SYMMES RD. - STA. 214+00 TO STA. 216+00

DESIGN AGENCY

HDR

DESIGNER
MJL

REVIEWER
PJD 02/21/25

PROJECT ID
SYMMES RD

SHEET P.15 TOTAL 115

BUT-SYMMES

MODEL: 00000_GX204 PAPERSIZE: 34x22 (in.) DATE: 3/31/2025 TIME: 2:03:03 PM USER: MLORENZ
pw:\\pwhdruseas01:HDR_US_East_01\Documents\Butler_County_Transportation_Improvement_District_-_Ohio\BCTID-SymmesRd_Grd_Separation\6.0_CAD_BIM\6.2_WIP\01_Design\000000\400-Engineering\Roadway\Sheets\Alt2 Symmes Road Cross Sections

MODEL: 00000_GX205 PAPERSIZE: 34x22 (in.) DATE: 3/31/2025 TIME: 2:03:05 PM USER: MLORENZ
pw:\\pwhdruseas01:HDR_US_East_01\Documents\Butler_County_Transportation_Improvement_District_-_Ohio\BCTID-SymmesRd_Grd_Separation\6.0_CAD_BIM\6.2_WIP\01_Design\000000\400-Engineering\Roadway\Sheets\Alt2 Symmes Road Cross Sections

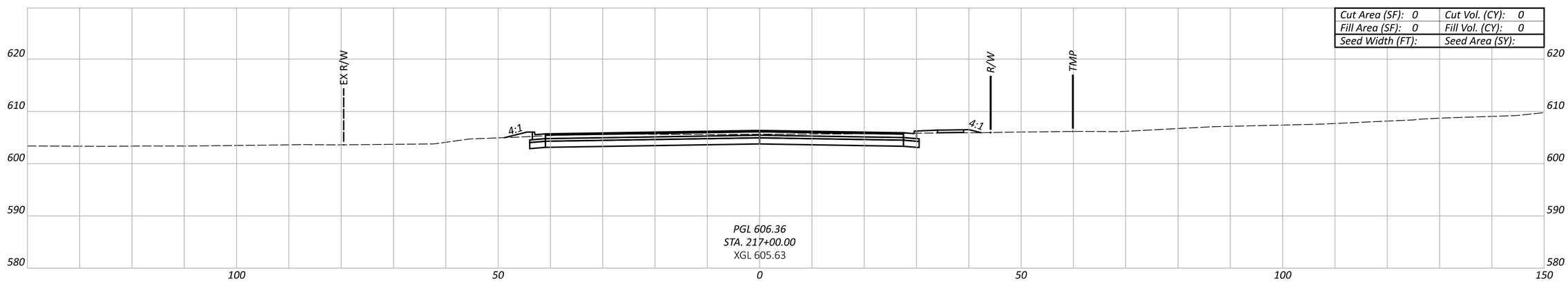

Cut Area (SF): 0	Cut Vol. (CY): 0
Fill Area (SF): 0	Fill Vol. (CY): 0
Seed Width (FT):	Seed Area (SY):

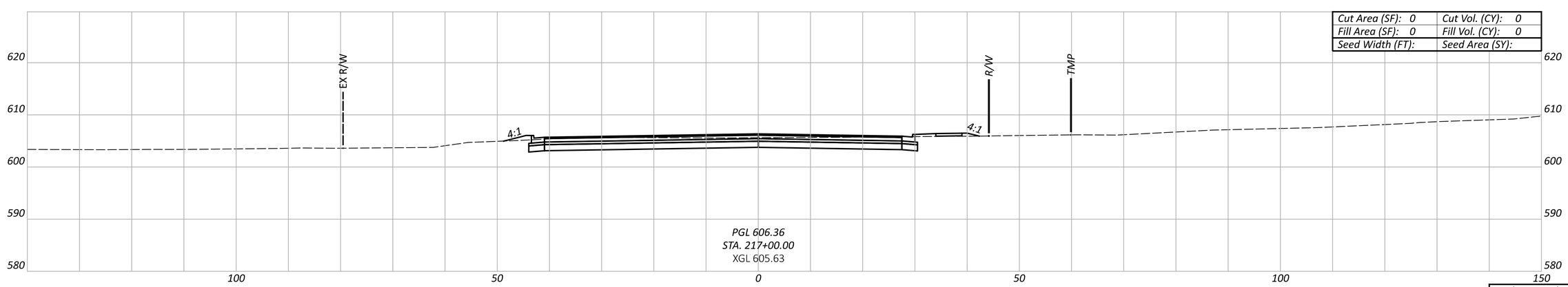

Cut Area (SF): 0	Cut Vol. (CY): 0
Fill Area (SF): 0	Fill Vol. (CY): 0
Seed Width (FT):	Seed Area (SY):

Sheet Totals		
Seeding	Cut	Fill

BUT-SYMMES

CROSS SECTIONS - ALTERNATIVE 2
SYMMES RD. - STA. 217+00 TO STA. 210+00

DESIGN AGENCY

HDR

DESIGNER
MJL

REVIEWER
PJD 02/21/25

PROJECT ID
SYMMES RD

SHEET P.16 TOTAL 115

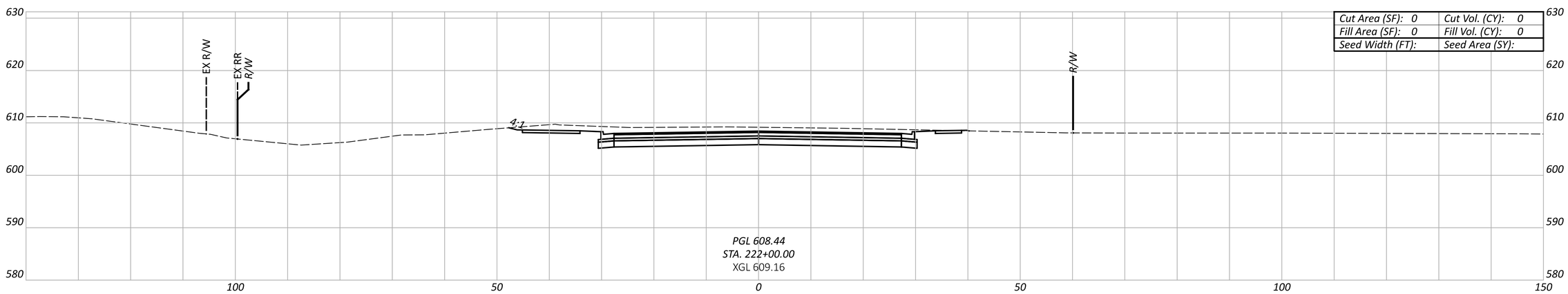

Cut Area (SF): 0	Cut Vol. (CY): 0
Fill Area (SF): 0	Fill Vol. (CY): 0
Seed Width (FT):	Seed Area (SY):

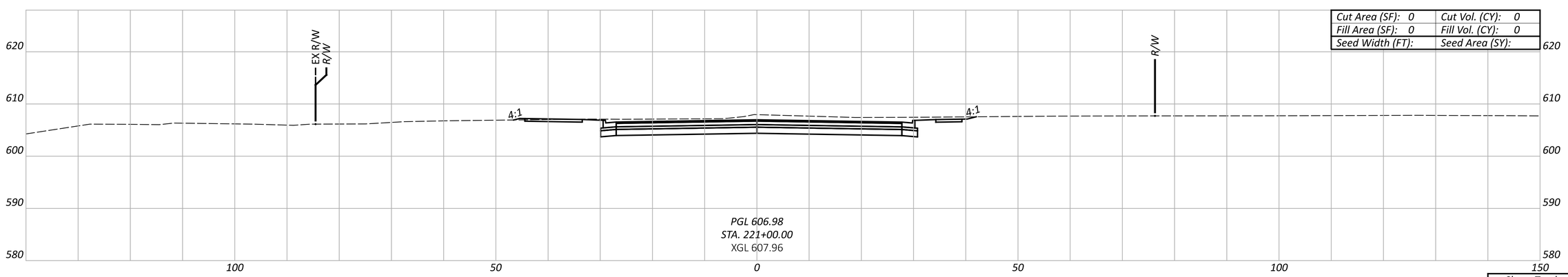

Cut Area (SF): 0	Cut Vol. (CY): 0
Fill Area (SF): 0	Fill Vol. (CY): 0
Seed Width (FT):	Seed Area (SY):

Sheet Totals		
Seeding	Cut	Fill

CROSS SECTIONS - ALTERNATIVE 2
SYMMES RD. - STA. 221+00 TO STA. 220+00

DESIGN AGENCY

HDR

DESIGNER
MJL

REVIEWER
PJD 02/21/25

PROJECT ID
SYMMES RD

SHEET P.17 TOTAL 115

BUT-SYMMES

MODEL: 00000_GX206 PAPERSIZE: 34x22 (in.) DATE: 3/31/2025 TIME: 2:03:08 PM USER: MLORENZ
pw:\\pwhdruseas01:HDR_US_East_01\Documents\Butler_County_Transportation_Improvement_District_-_Ohio\BCTID-SymmesRd_Grd_Separation\6.0_CAD_BIM\6.2_WIP\01_Design\000000\400-Engineering\Roadway\Sheets\Alt2 Symmes Road Cross Sections

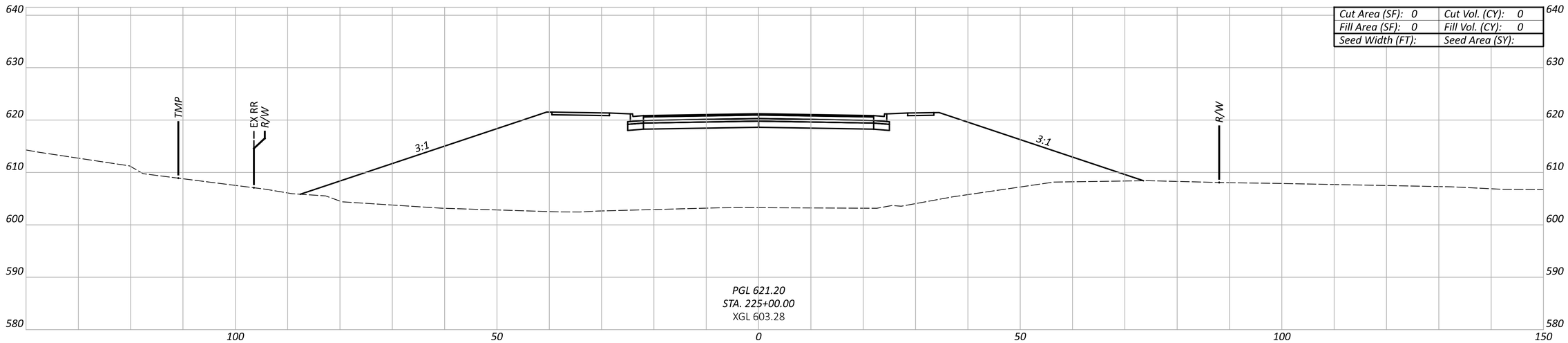

Cut Area (SF): 0	Cut Vol. (CY): 0
Fill Area (SF): 0	Fill Vol. (CY): 0
Seed Width (FT):	Seed Area (SY):

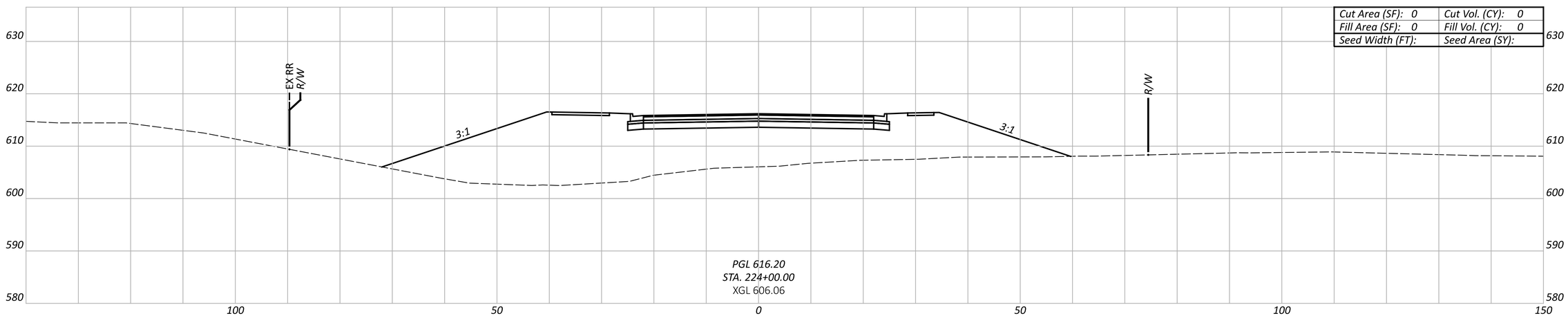

Cut Area (SF): 0	Cut Vol. (CY): 0
Fill Area (SF): 0	Fill Vol. (CY): 0
Seed Width (FT):	Seed Area (SY):

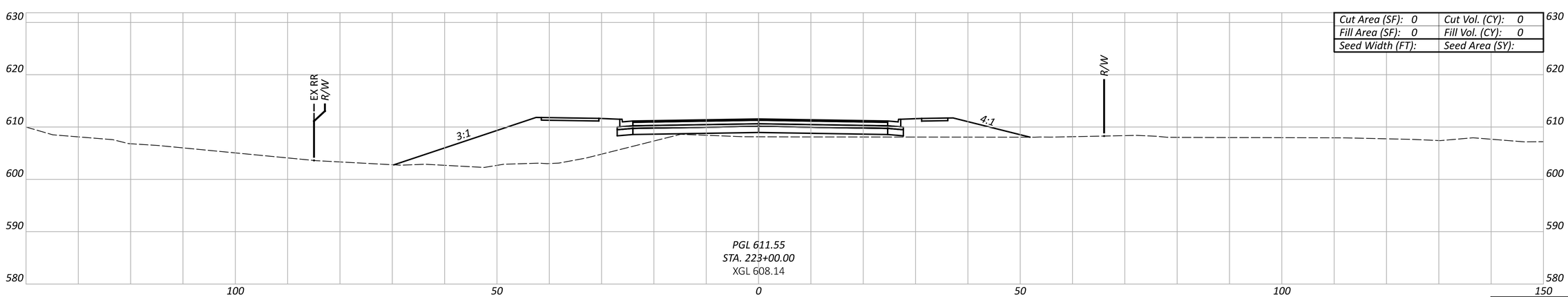

Cut Area (SF): 0	Cut Vol. (CY): 0
Fill Area (SF): 0	Fill Vol. (CY): 0
Seed Width (FT):	Seed Area (SY):

Sheet Totals		
Seeding	Cut	Fill

CROSS SECTIONS - ALTERNATIVE 2
SYMMES RD. - STA. 223+00 TO STA. 225+00

DESIGN AGENCY

HDR

DESIGNER
MJL

REVIEWER
PJD 02/21/25

PROJECT ID
SYMMES RD

SHEET P.18 TOTAL 115

BUT-SYMMES

MODEL: 00000_GX207 PAPERSIZE: 34x22 (in.) DATE: 3/31/2025 TIME: 2:03:11 PM USER: MLORENZ
pw:\\pwhdruseas01:HDR_US_East_01\Documents\Butler_County_Transportation_Improvement_District_-_Ohio\BCTID-SymmesRd_Grd_Separation\6.0_CAD_BIM\6.2_WIP\01_Design\000000\400-Engineering\Roadway\Sheets\Alt2 Symmes Road Cross Sections

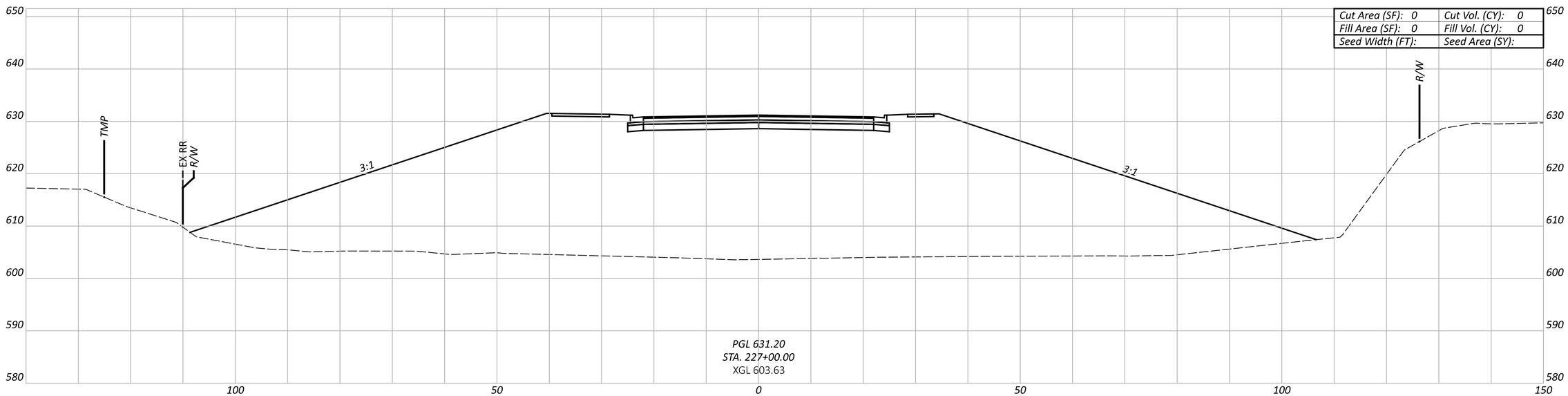

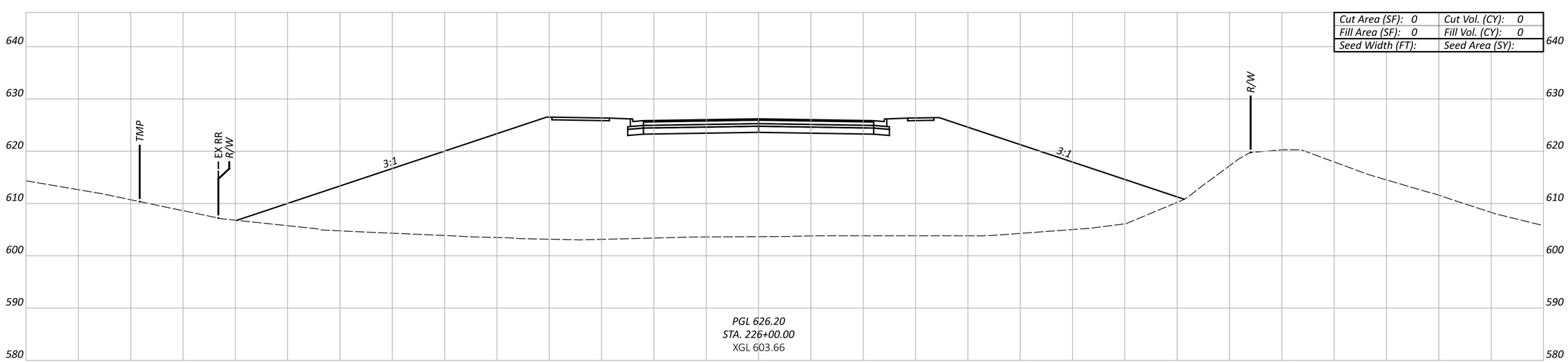

Sheet Totals		
Seeding	Cut	Fill

CROSS SECTIONS - ALTERNATIVE 2
SYMMES RD. - STA. 226+00 TO STA. 227+00

DESIGN AGENCY

HDR

DESIGNER
MJL

REVIEWER
PJD 02/21/25

PROJECT ID
SYMMES RD

SHEET P.19 TOTAL 115

BUT-SYMMES

MODEL: 00000_GX208 PAPERSIZE: 34x22 (in.) DATE: 3/31/2025 TIME: 2:03:14 PM USER: MLORENZ
pw:\\pwhdruseas01:HDR_US_East_01\Documents\Butler_County_Transportation_Improvement_District_-_Ohio\BCTID-SymmesRd_Grd_Separation\6.0_CAD_BIM\6.2_WIP\01_Design\000000\400-Engineering\Roadway\Sheets\Alt2 Symmes Road Cross Sections

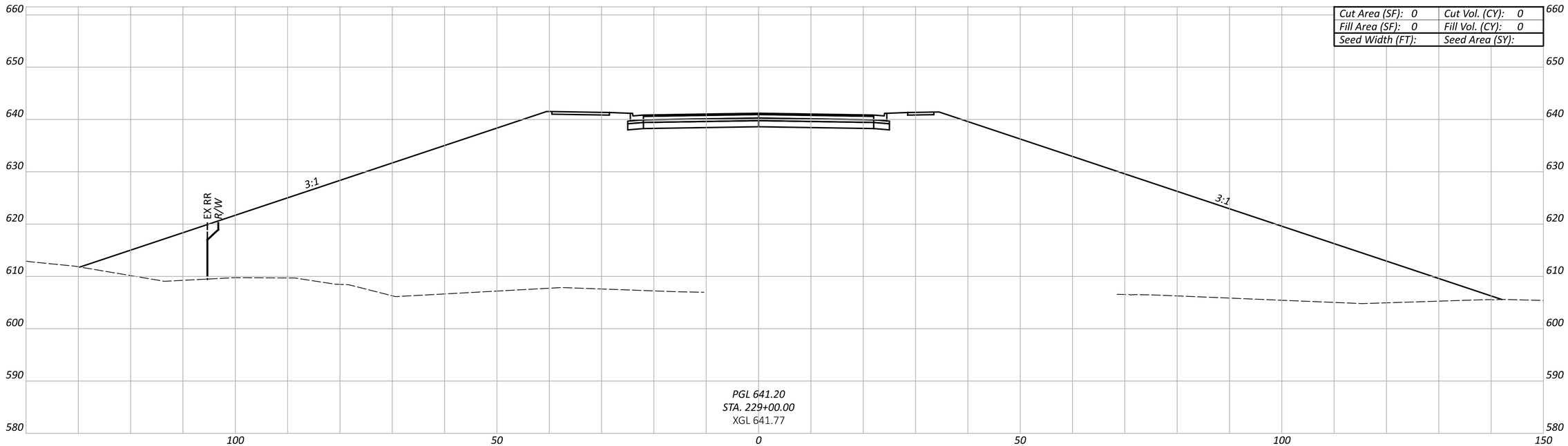

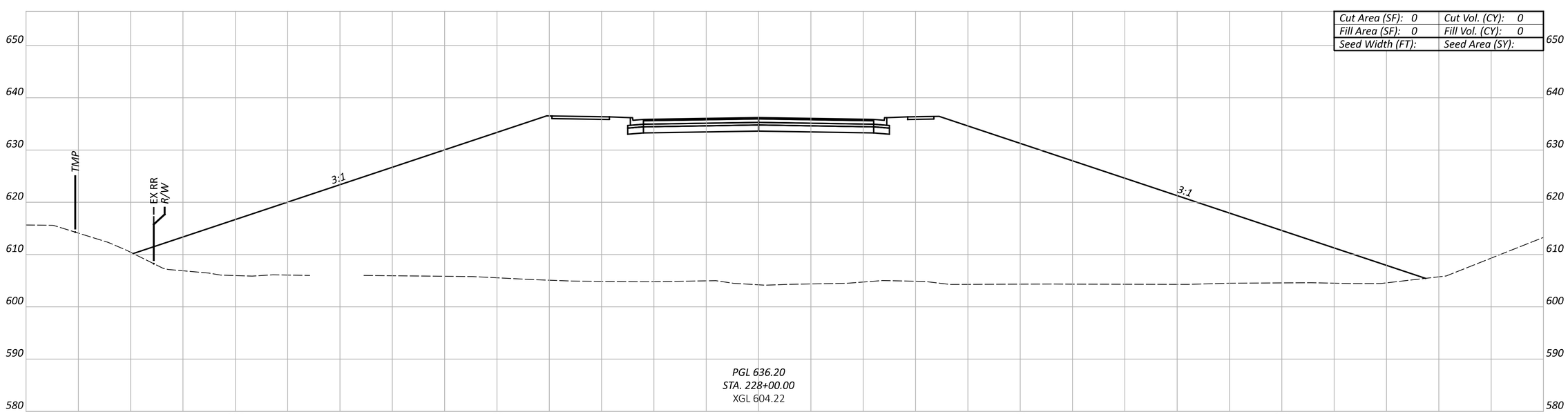

Sheet Totals		
Seeding	Cut	Fill

CROSS SECTIONS - ALTERNATIVE 2
SYMMES RD. - STA. 228+00 TO STA. 229+00

DESIGN AGENCY

HDR

DESIGNER
MJL

REVIEWER
PJD 02/21/25

PROJECT ID
SYMMES RD

SHEET P.20 TOTAL 115

BUT-SYMMES

MODEL: 00000_GX209 PAPERSIZE: 34x22 (in.) DATE: 3/31/2025 TIME: 2:03:17 PM USER: MLORENZ
pw:\\pwhdruseas01:HDR_US_East_01\Documents\Butler_County_Transportation_Improvement_District_-_Ohio\BCTID-SymmesRd_Grd_Separation\6.0_CAD_BIM\6.2_WIP\01_Design\000000\400-Engineering\Roadway\Sheets\Alt2 Symmes Road Cross Sections

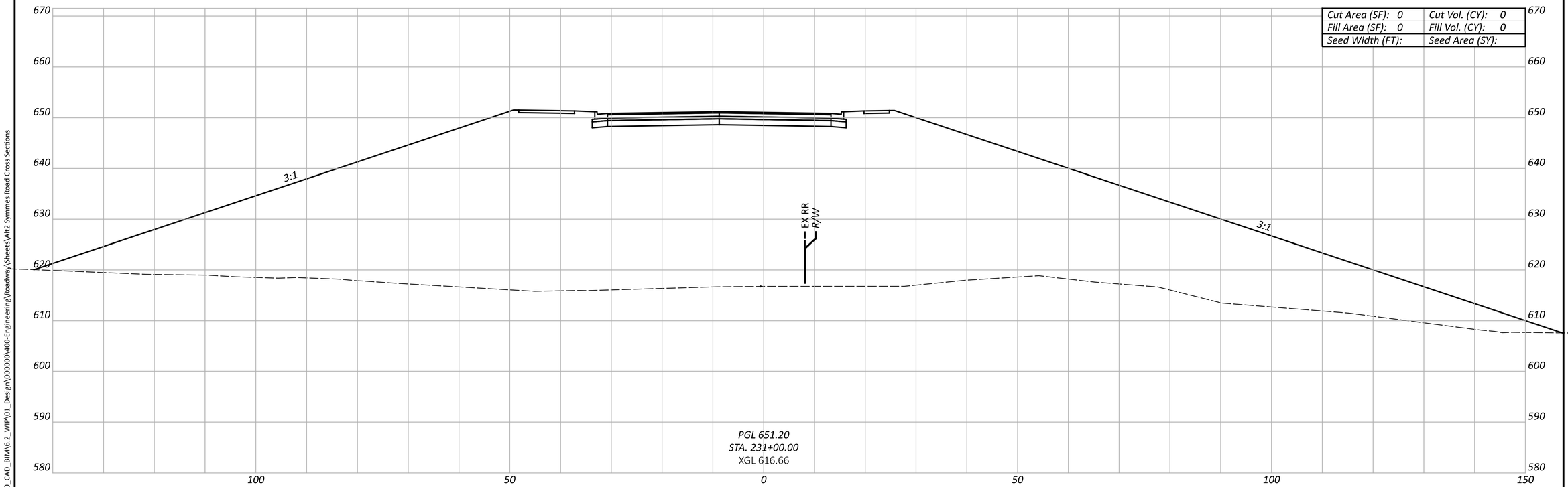

Cut Area (SF): 0	Cut Vol. (CY): 0
Fill Area (SF): 0	Fill Vol. (CY): 0
Seed Width (FT):	Seed Area (SY):

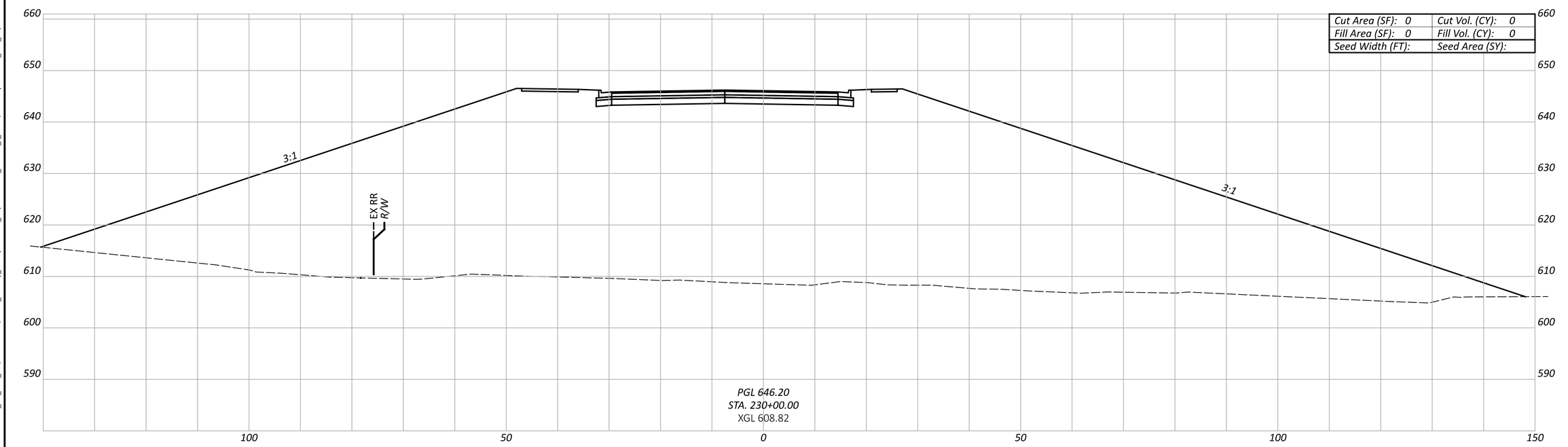

Cut Area (SF): 0	Cut Vol. (CY): 0
Fill Area (SF): 0	Fill Vol. (CY): 0
Seed Width (FT):	Seed Area (SY):

CROSS SECTIONS - ALTERNATIVE 2
SYMMES RD. - STA. 230+00 TO STA. 231+00

BUT-SYMMES

MODEL: 00000_GX210 PAPERSIZE: 34x22 (in.) DATE: 3/31/2025 TIME: 2:03:20 PM USER: MLORENZ
pw:\\pwhdruseas01:HDR_US_East_01\Documents\Butler_County_Transportation_Improvement_District_-_Ohio\BCTID-SymmesRd_Grd_Separation\6.0_CAD_BIM\6.2_WIP\01_Design\000000\400-Engineering\Roadway\Sheets\Alt2 Symmes Road Cross Sections

Sheet Totals		
Seeding	Cut	Fill

DESIGN AGENCY

HDR

DESIGNER
MJL

REVIEWER
PJD 02/21/25

PROJECT ID
SYMMES RD

SHEET P.21 TOTAL 115

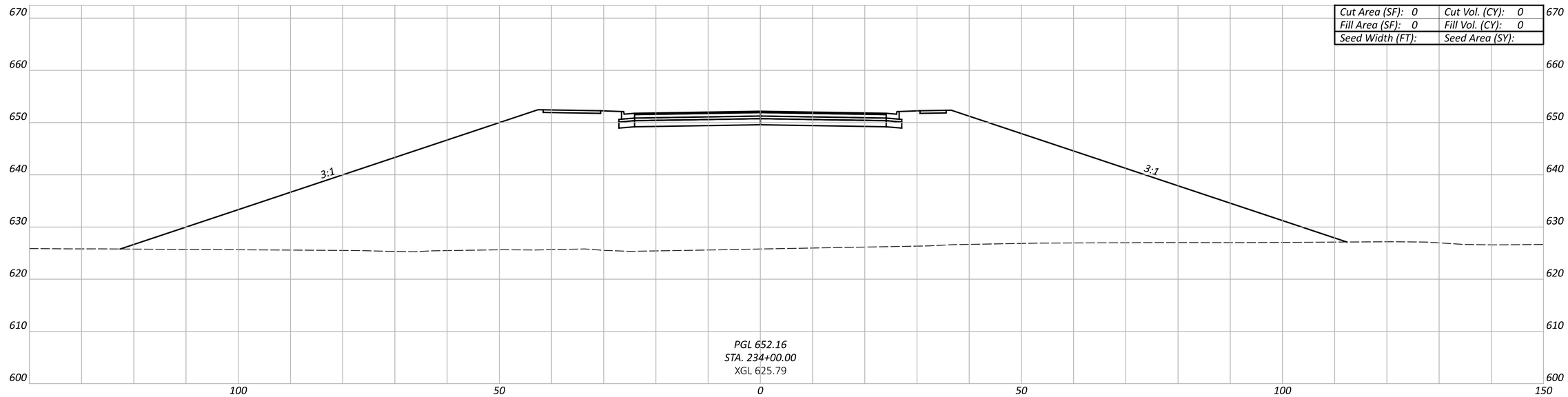

Cut Area (SF): 0	Cut Vol. (CY): 0
Fill Area (SF): 0	Fill Vol. (CY): 0
Seed Width (FT):	Seed Area (SY):

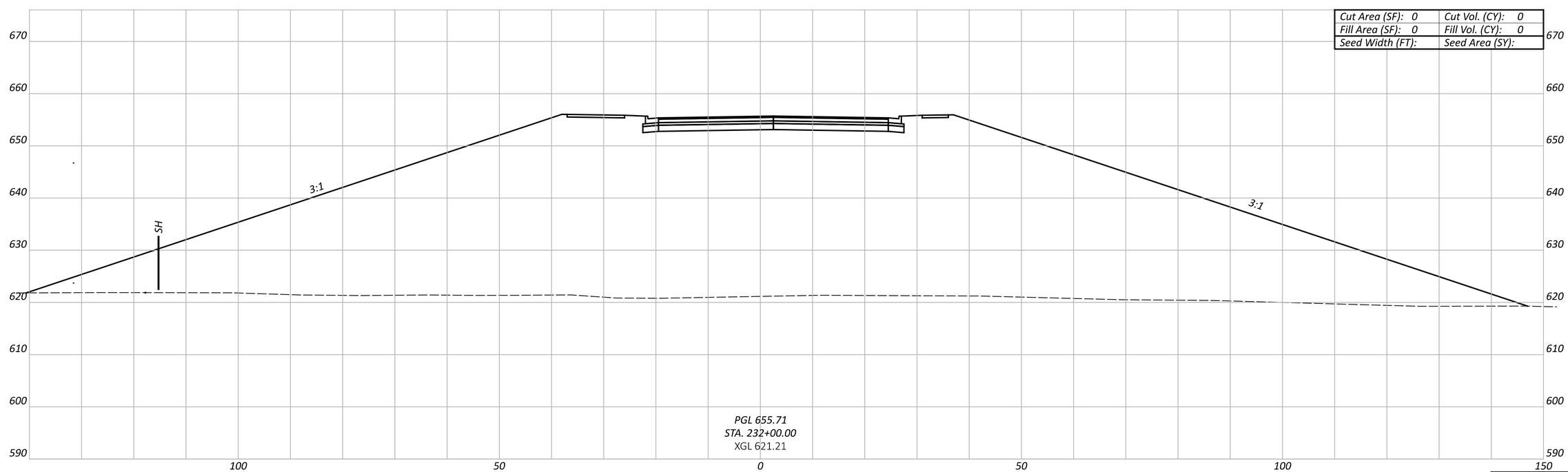

Cut Area (SF): 0	Cut Vol. (CY): 0
Fill Area (SF): 0	Fill Vol. (CY): 0
Seed Width (FT):	Seed Area (SY):

Sheet Totals		
Seeding	Cut	Fill

CROSS SECTIONS - ALTERNATIVE 2
SYMMES RD. - STA. 233+00 TO STA. 234+00

DESIGN AGENCY

HDR

DESIGNER
MJL

REVIEWER
PJD 02/21/25

PROJECT ID
SYMMES RD

SHEET P.22 TOTAL 115

BUT-SYMMES

MODEL: 00000_GX211 PAPERSIZE: 34x22 (in.) DATE: 3/31/2025 TIME: 2:03:22 PM USER: MLORENZ
pw:\\pwhdruseas01:HDR_US_East_01\Documents\Butler_County_Transportation_Improvement_District_-_Ohio\BCTID-SymmesRd_Grd_Separation\6.0_CAD_BIM\6.2_WIP\01_Design\000000\400-Engineering\Roadway\Sheets\Alt2 Symmes Road Cross Sections

BUT-SYMMES

MODEL: 00000_GX212 PAPERSIZE: 34x22 (in.) DATE: 3/31/2025 TIME: 2:03:25 PM USER: MLORENZ
pw:\\pwhdruseas01:HDR_US_East_01\Documents\Butler_County_Transportation_Improvement_District_-_Ohio\BCTID-SymmesRd_Grd_Separation\6.0_CAD_BIM\6.2_WIP\01_Design\000000\400-Engineering\Roadway\Sheets\Alt2 Symmes Road Cross Sections

Cut Area (SF): 0	Cut Vol. (CY): 0
Fill Area (SF): 0	Fill Vol. (CY): 0
Seed Width (FT):	Seed Area (SY):

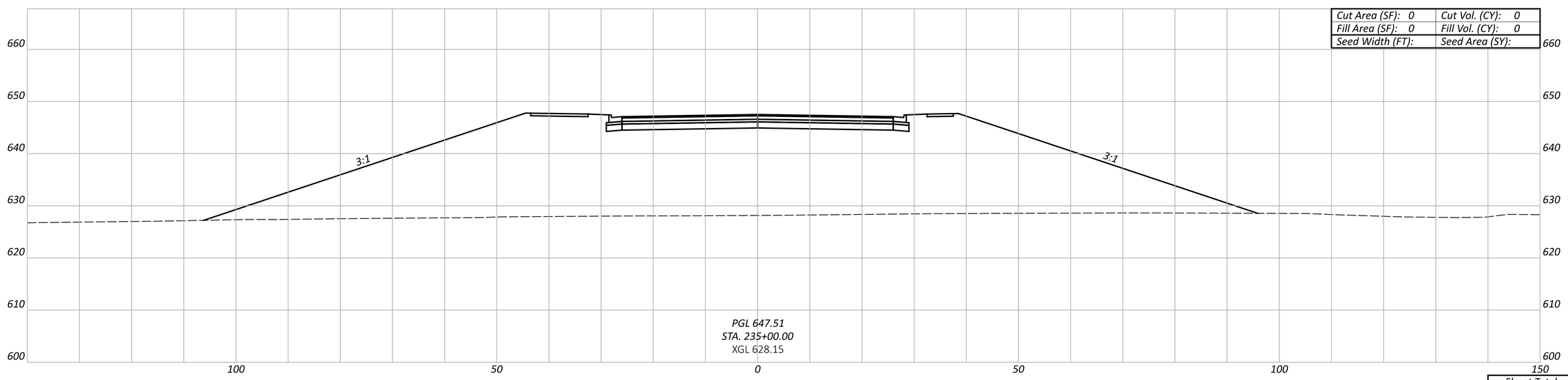

Sheet Totals		
Seeding	Cut	Fill

CROSS SECTIONS - ALTERNATIVE 2
SYMMES RD. - STA. 235+00 TO STA. 236+00

DESIGN AGENCY

HDR

DESIGNER
MJL

REVIEWER
PJD 02/21/25

PROJECT ID
SYMMES RD

SHEET P.23 TOTAL 115

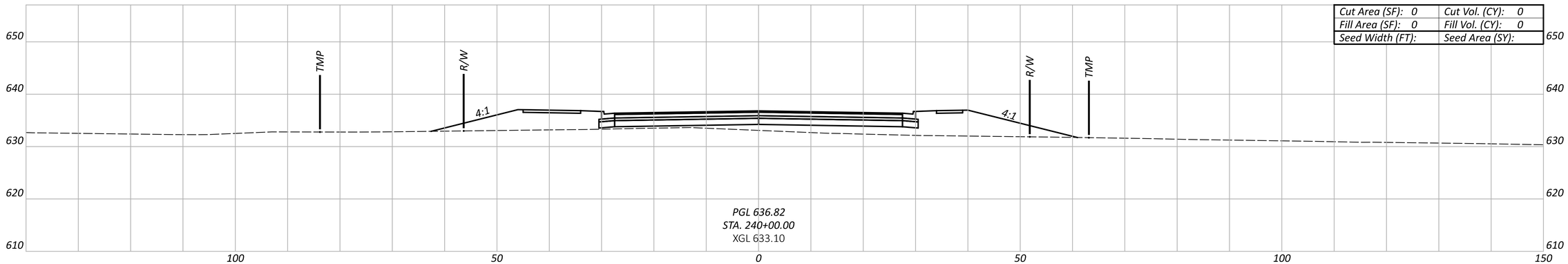

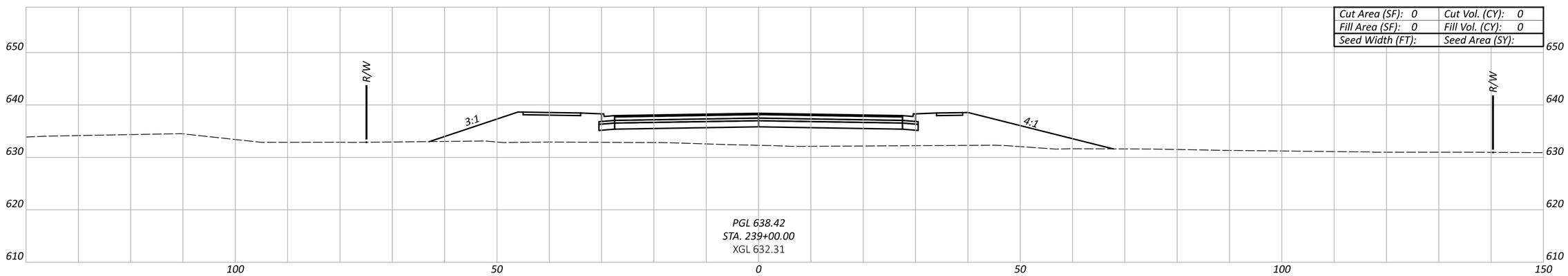

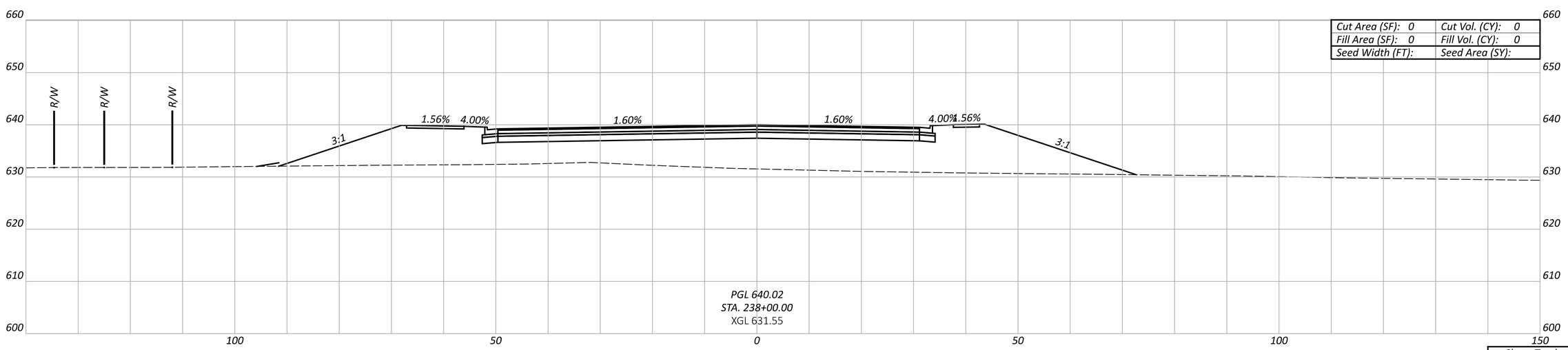

Sheet Totals		
Seeding	Cut	Fill

CROSS SECTIONS - ALTERNATIVE 2
SYMMES RD. - STA. 238+00 TO STA. 240+00

DESIGN AGENCY

HDR

DESIGNER
MJL

REVIEWER
PJD 02/21/25

PROJECT ID
SYMMES RD

SHEET P.24 TOTAL 115

BUT-SYMMES

MODEL: 00000_GX213 PAPERSIZE: 34x22 (in.) DATE: 3/31/2025 TIME: 2:03:27 PM USER: MLORENZ
pw:\\pwhdruseas01:HDR_US_East_01\Documents\Butler_County_Transportation_Improvement_District_-_Ohio\BCTID-SymmesRd_Grd_Separation\6.0_CAD_BIM\6.2_WIP\01_Design\000000\400-Engineering\Roadway\Sheets\Alt2 Symmes Road Cross Sections

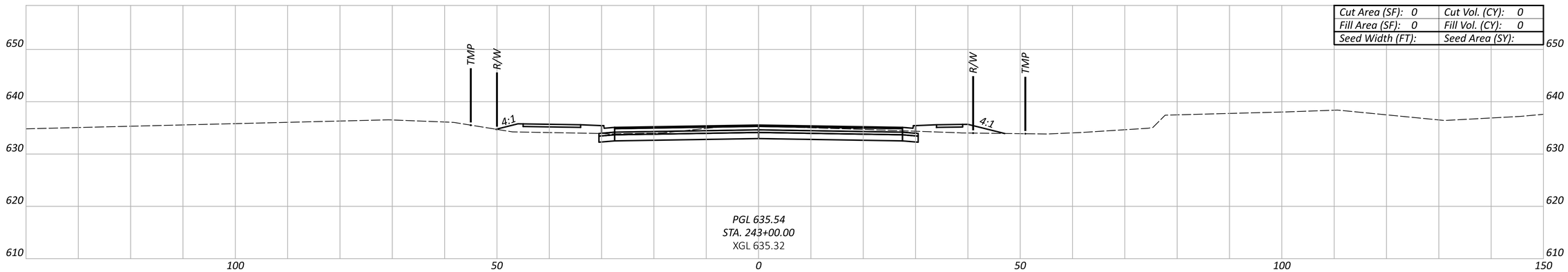

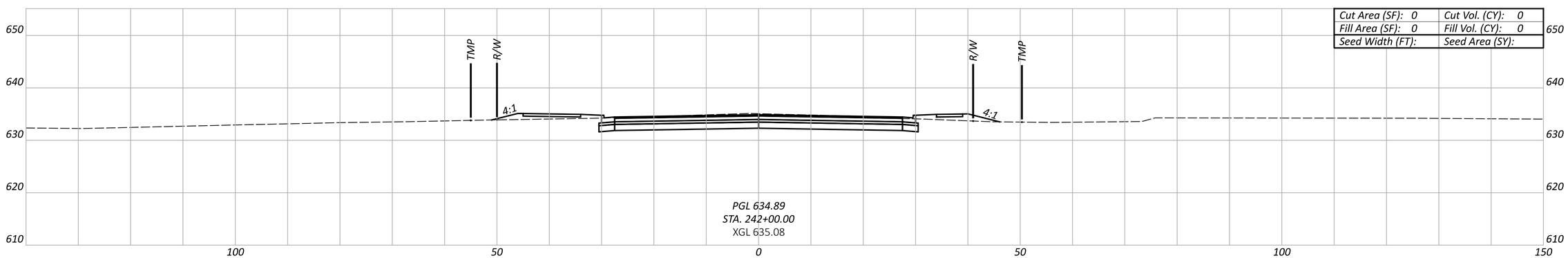

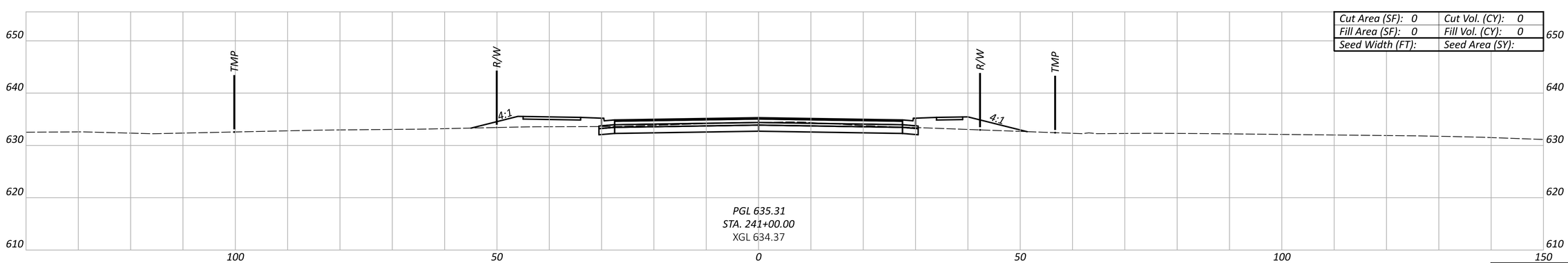

Sheet Totals		
Seeding	Cut	Fill

CROSS SECTIONS - ALTERNATIVE 2
SYMMES RD. - STA. 241+00 TO STA. 243+00

DESIGN AGENCY

HDR

DESIGNER
MJL

REVIEWER
PJD 02/21/25

PROJECT ID
SYMMES RD

SHEET P.25 TOTAL 115

BUT-SYMMES

MODEL: 00000_GX214 PAPERSIZE: 34x22 (in.) DATE: 3/31/2025 TIME: 2:03:30 PM USER: MLORENZ
pw:\\pwhdruseas01:HDR_US_East_01\Documents\Butler_County_Transportation_Improvement_District_-_Ohio\BCTID-SymmesRd_Grd_Separation\6.0_CAD_BIM\6.2_WIP\01_Design\000000\400-Engineering\Roadway\Sheets\Alt2 Symmes Road Cross Sections

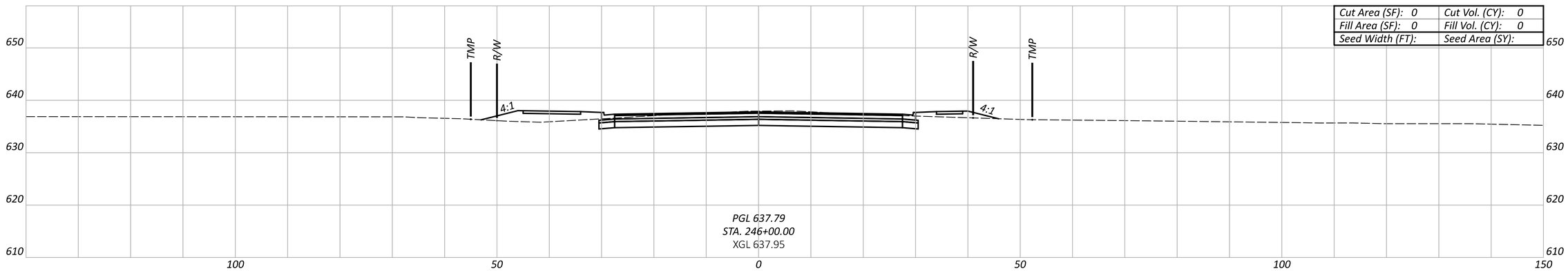

Cut Area (SF): 0	Cut Vol. (CY): 0
Fill Area (SF): 0	Fill Vol. (CY): 0
Seed Width (FT):	Seed Area (SY):

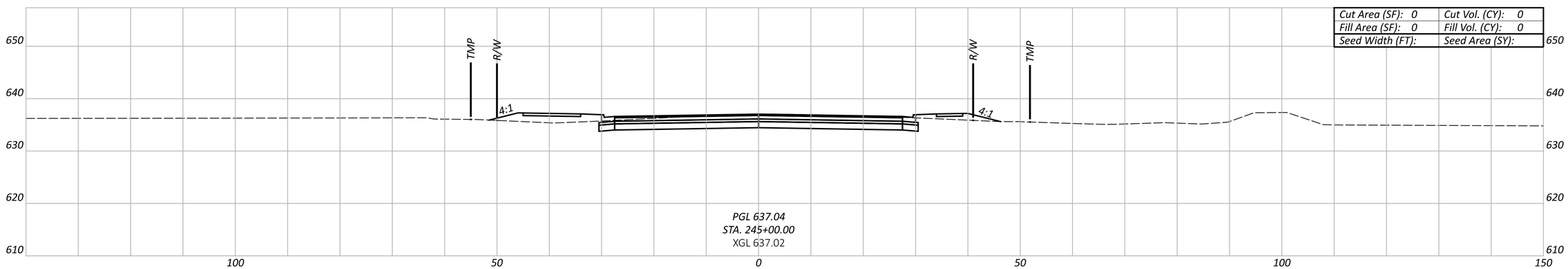

Cut Area (SF): 0	Cut Vol. (CY): 0
Fill Area (SF): 0	Fill Vol. (CY): 0
Seed Width (FT):	Seed Area (SY):

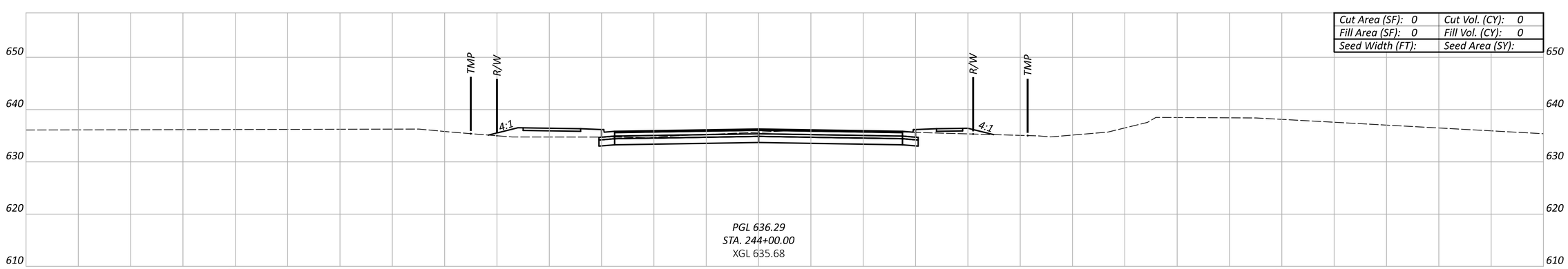

Cut Area (SF): 0	Cut Vol. (CY): 0
Fill Area (SF): 0	Fill Vol. (CY): 0
Seed Width (FT):	Seed Area (SY):

Sheet Totals		
Seeding	Cut	Fill

CROSS SECTIONS - ALTERNATIVE 2
SYMMES RD. - STA. 244+00 TO STA. 246+00

DESIGN AGENCY

HDR

DESIGNER
MJL

REVIEWER
PJD 02/21/25

PROJECT ID
SYMMES RD

SHEET P.26 TOTAL 115

BUT-SYMMES

MODEL: 00000_GX215 PAPERSIZE: 34x22 (in.) DATE: 3/31/2025 TIME: 2:03:33 PM USER: MLORENZ
pw:\\pwhdruseas01:HDR_US_East_01\Documents\Butler_County_Transportation_Improvement_District_-_Ohio\BCTID-SymmesRd_Grd_Separation\6.0_CAD_BIM\6.2_WIP\01_Design\000000\400-Engineering\Roadway\Sheets\Alt2 Symmes Road Cross Sections

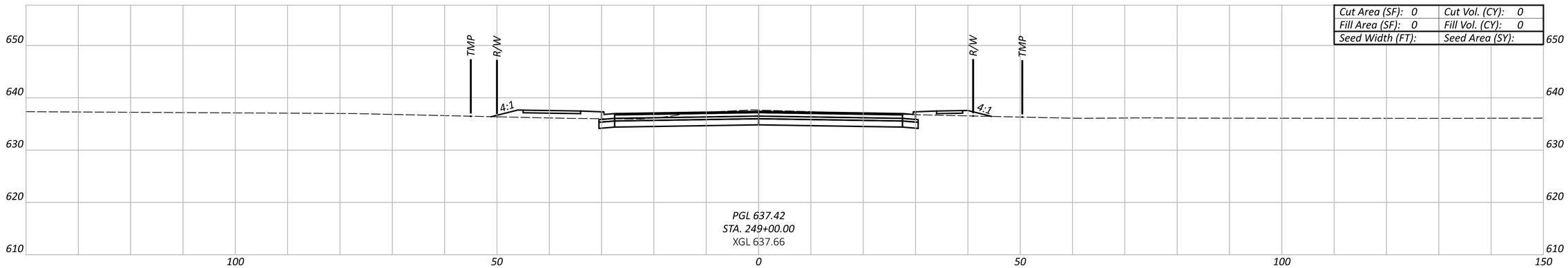

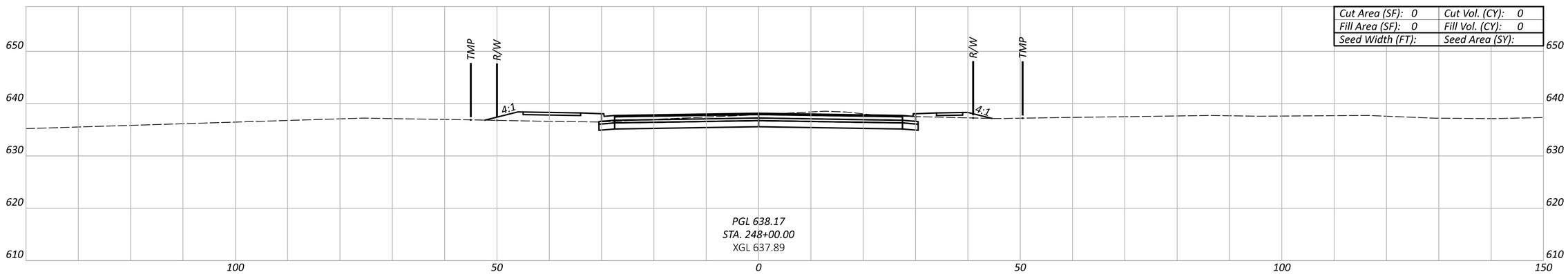

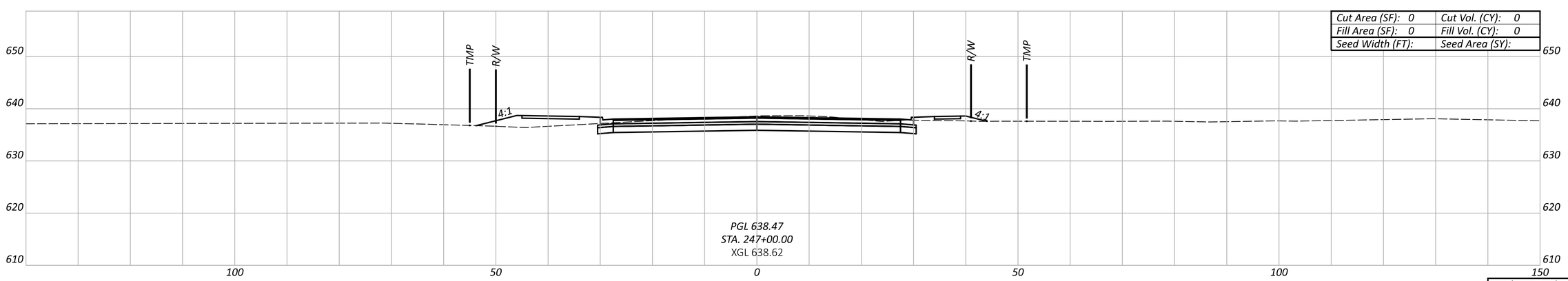

Sheet Totals		
Seeding	Cut	Fill

CROSS SECTIONS - ALTERNATIVE 2
SYMMES RD. - STA. 247+00 TO STA. 249+00

DESIGN AGENCY

HDR

DESIGNER
MJL

REVIEWER
PJD 02/21/25

PROJECT ID
SYMMES RD

SHEET P.27 TOTAL 115

BUT-SYMMES

MODEL: 00000_GX216 PAPERSIZE: 34x22 (in.) DATE: 3/31/2025 TIME: 2:03:37 PM USER: MLORENZ
pw:\\pwhdruseas01:HDR_US_East_01\Documents\Butler_County_Transportation_Improvement_District_-_Ohio\BCTID-SymmesRd_Grd_Separation\6.0_CAD_BIM\6.2_WIP\01_Design\000000\400-Engineering\Roadway\Sheets\Alt2 Symmes Road Cross Sections

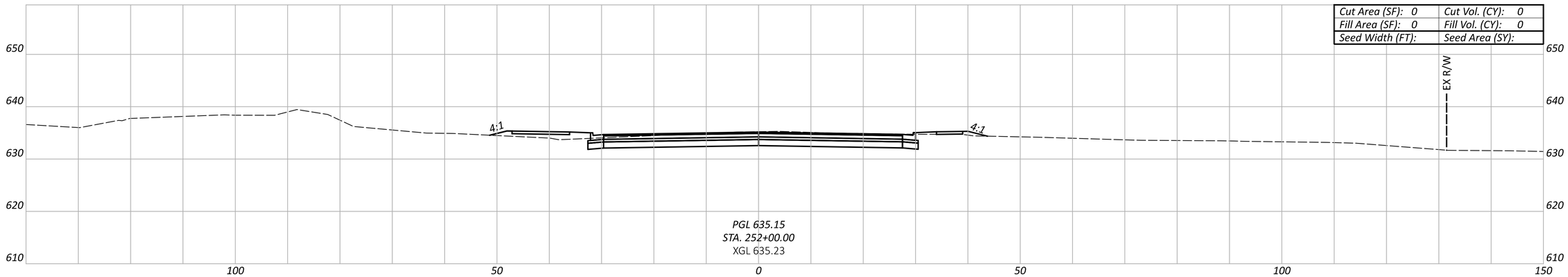

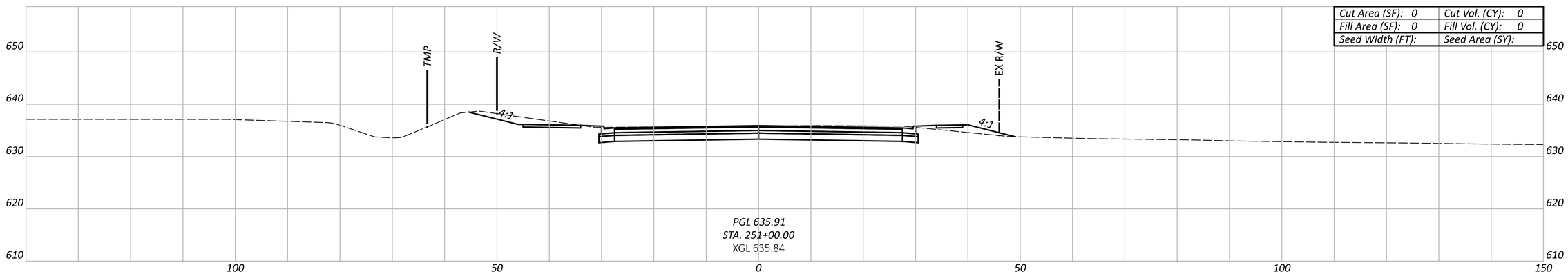

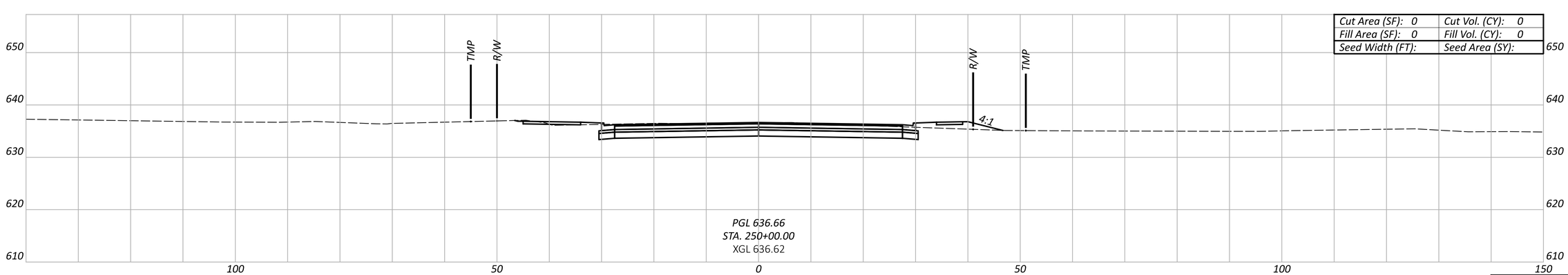

Sheet Totals		
Seeding	Cut	Fill

CROSS SECTIONS - ALTERNATIVE 2
SYMMES RD. - STA. 250+00 TO STA. 252+00

DESIGN AGENCY

HDR

DESIGNER
MJL

REVIEWER
PJD 02/21/25

PROJECT ID
SYMMES RD

SHEET P.28 TOTAL 115

BUT-SYMMES

MODEL: 00000_GX217 PAPERSIZE: 34x22 (in.) DATE: 3/31/2025 TIME: 2:03:40 PM USER: MLORENZ
pw:\\pwhdruseas01:HDR_US_East_01\Documents\Butler_County_Transportation_Improvement_District_-_Ohio\BCTID-SymmesRd_Grd_Separation\6.0_CAD_BIM\6.2_WIP\01_Design\000000\400-Engineering\Roadway\Sheets\Alt2 Symmes Road Cross Sections

BUT-SYMMES

MODEL: 00000_GX218 PAPERSIZE: 34x22 (in.) DATE: 3/31/2025 TIME: 2:03:43 PM USER: MLORENZ
pw:\\pwhdruseas01:HDR_US_East_01\Documents\Butler_County_Transportation_Improvement_District_-_Ohio\BCTID-SymmesRd_Grd_Separation\6.0_CAD_BIM\6.2_WIP\01_Design\000000\400-Engineering\Roadway\Sheets\Alt2 Symmes Road Cross Sections

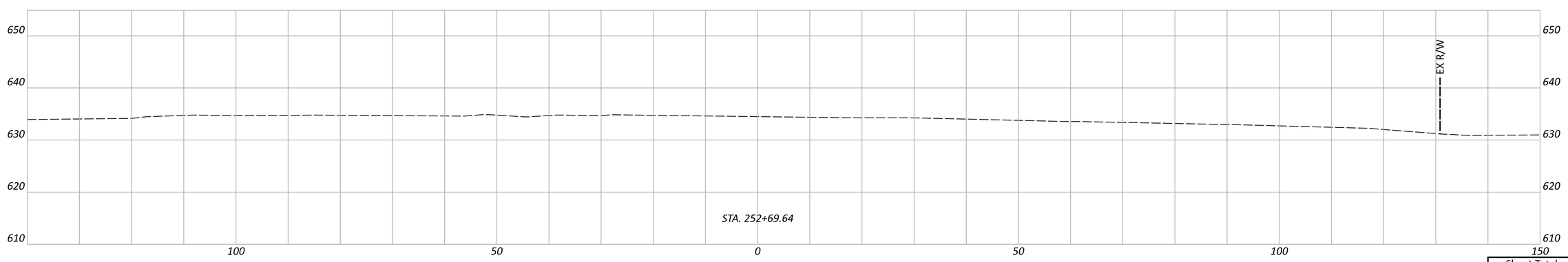

Sheet Totals		
Seeding	Cut	Fill

CROSS SECTIONS - ALTERNATIVE 2
SYMMES RD. - STA. 252+69.64

DESIGN AGENCY

HDR

DESIGNER
MJL

REVIEWER
PJD 02/21/25

PROJECT ID
SYMMES RD

SHEET P.29 TOTAL 115

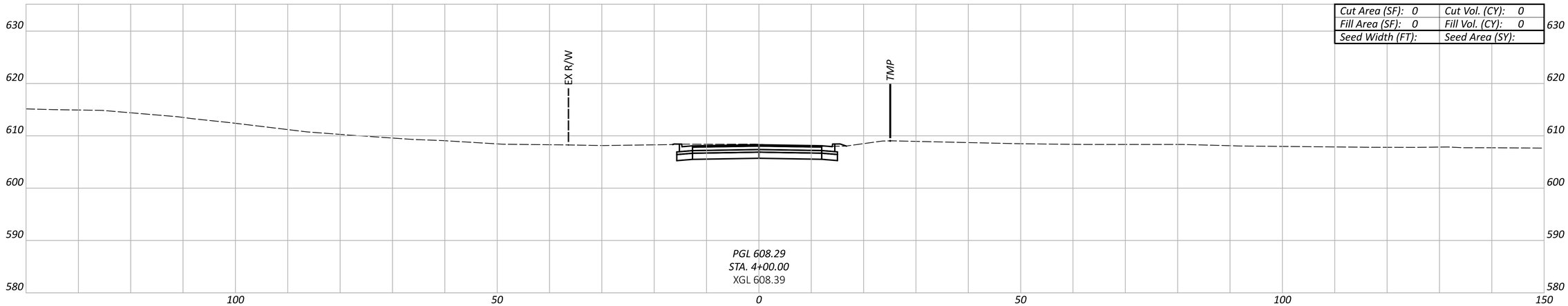

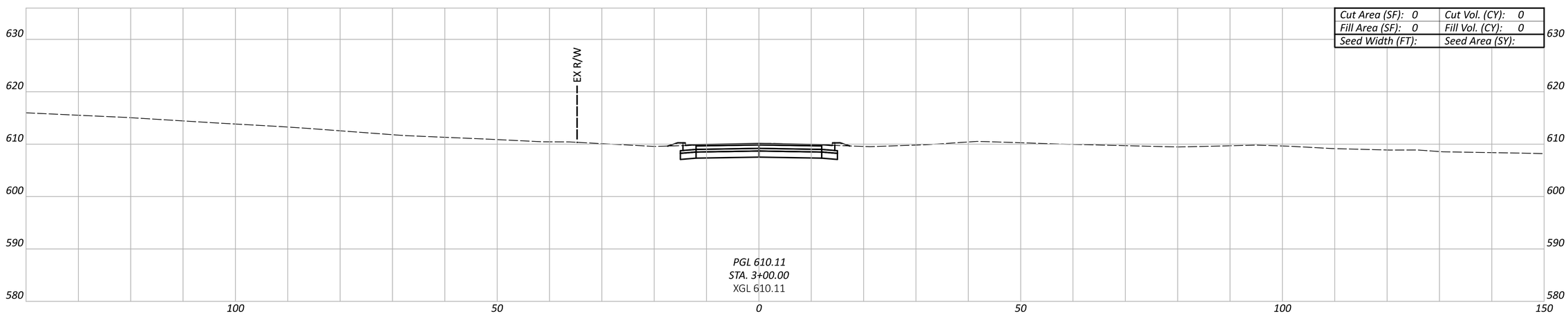

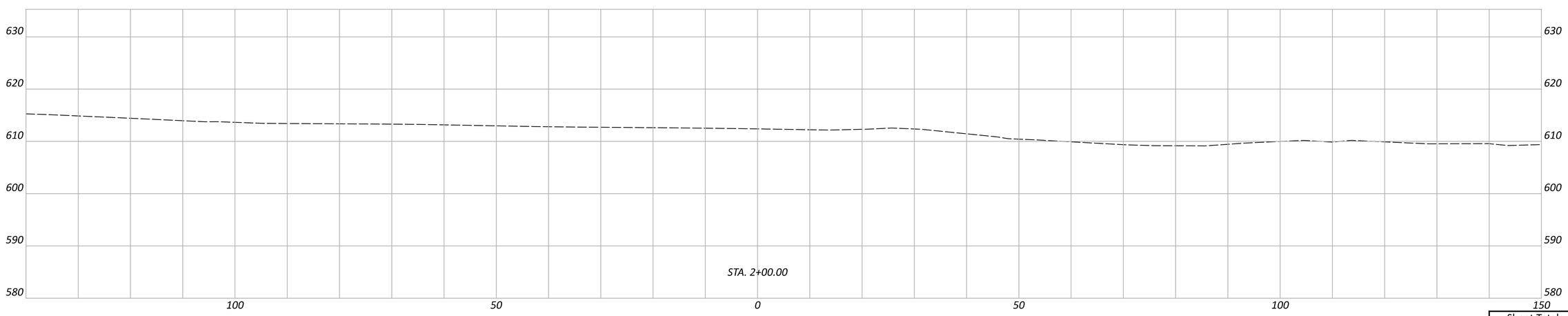

Sheet Totals		
Seeding	Cut	Fill

CROSS SECTIONS - ALTERNATIVE 2
INDUSTRY DRIVE - STA. 2+00 TO STA. 4+00

DESIGN AGENCY

HDR

DESIGNER
MJL

REVIEWER
PJD 02/21/25

PROJECT ID
SYMMES RD

SHEET P.30 TOTAL 115

BUT-SYMMES

MODEL: 00000_GX219 PAPERSIZE: 34x22 (in.) DATE: 3/31/2025 TIME: 2:03:44 PM USER: MLORENZ
pw:\\pwhdruseas01:HDR_US_East_01\Documents\Butler_County_Transportation_Improvement_District_-_Ohio\BCTID-SymmesRd_Grd_Separation\6.0_CAD_BIM\6.2_WIP\01_Design\000000\400-Engineering\Roadway\Sheets\Alt2 Symmes Road Cross Sections

BUT-SYMMES

MODEL: 00000_GX220 PAPERSIZE: 34x22 (in.) DATE: 3/31/2025 TIME: 2:03:48 PM USER: MLORENZ
pw:\\pwhdruseas01:HDR_US_East_01\Documents\Butler_County_Transportation_Improvement_District_-_Ohio\BCTID-SymmesRd_Grd_Separation\6.0_CAD_BIM\6.2_WIP\01_Design\000000\400-Engineering\Roadway\Sheets\Alt2 Symmes Road Cross Sections

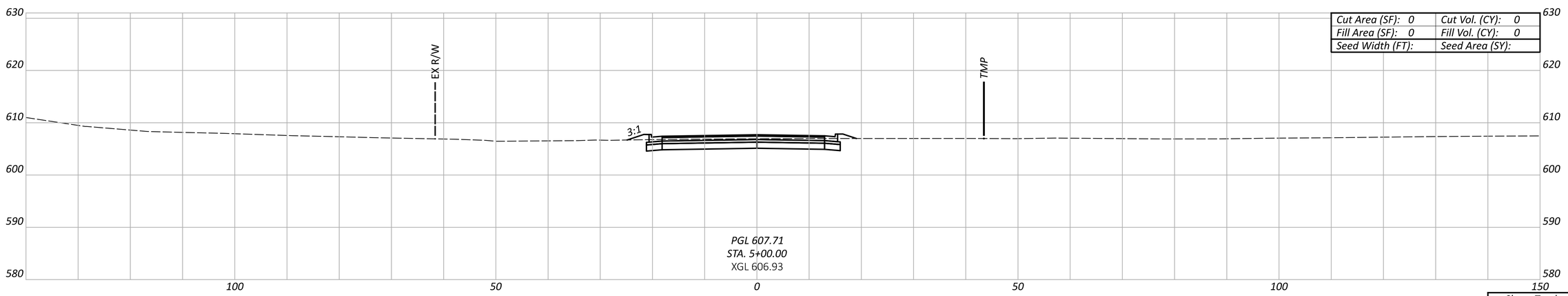

Cut Area (SF): 0	Cut Vol. (CY): 0
Fill Area (SF): 0	Fill Vol. (CY): 0
Seed Width (FT):	Seed Area (SY):

Sheet Totals		
Seeding	Cut	Fill

CROSS SECTIONS - ALTERNATIVE 2
INDUSTRY DRIVE - STA. 5+00 TO STA. 6+26.30

DESIGN AGENCY

HDR

DESIGNER
MJL

REVIEWER
PJD 02/21/25

PROJECT ID
SYMMES RD

SHEET P.31 TOTAL 115

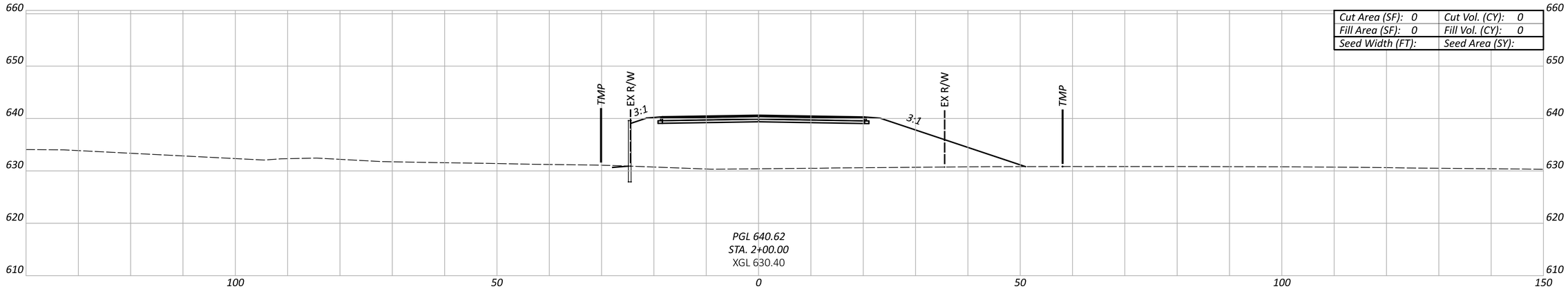

Cut Area (SF): 0	Cut Vol. (CY): 0
Fill Area (SF): 0	Fill Vol. (CY): 0
Seed Width (FT):	Seed Area (SY):

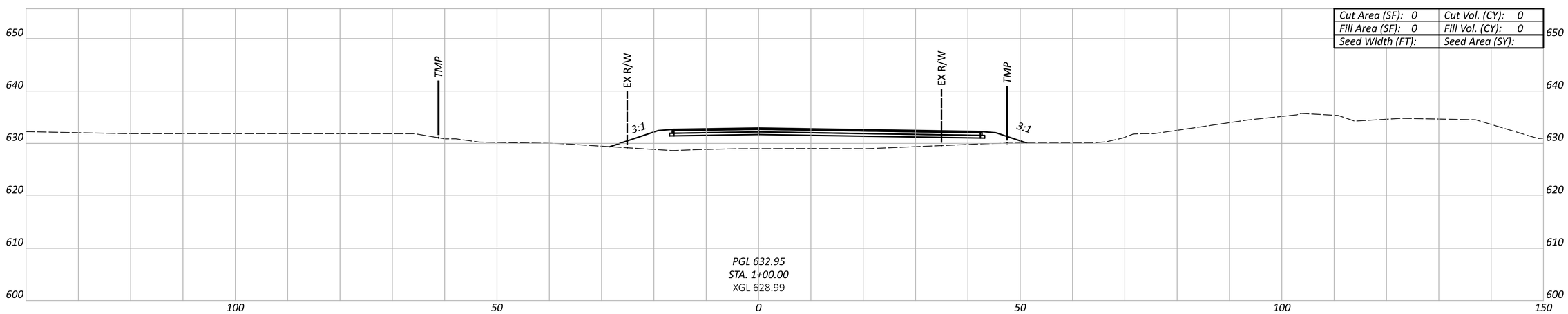

Cut Area (SF): 0	Cut Vol. (CY): 0
Fill Area (SF): 0	Fill Vol. (CY): 0
Seed Width (FT):	Seed Area (SY):

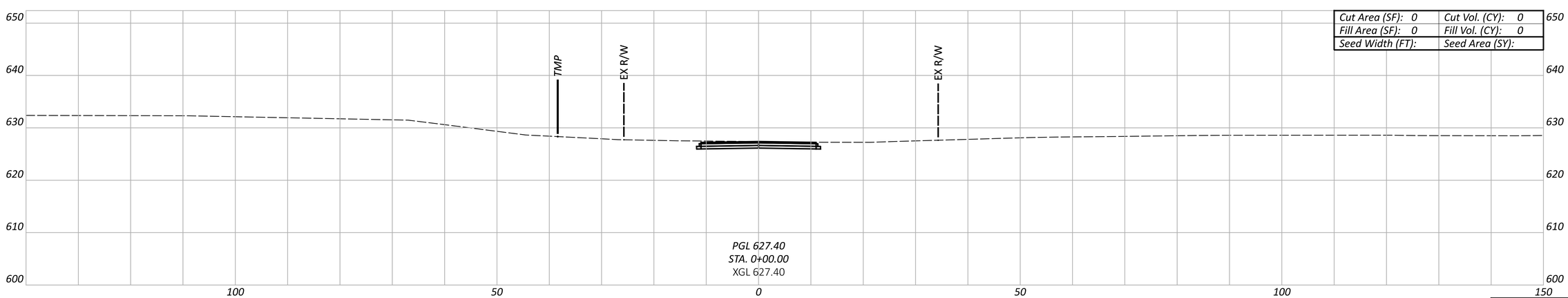

Cut Area (SF): 0	Cut Vol. (CY): 0
Fill Area (SF): 0	Fill Vol. (CY): 0
Seed Width (FT):	Seed Area (SY):

Sheet Totals		
Seeding	Cut	Fill

CROSS SECTIONS - ALTERNATIVE 2
TEDIA WAY - STA. 0+00 TO STA. 2+00

DESIGN AGENCY

HDR

DESIGNER
MJL

REVIEWER
PJD 02/21/25

PROJECT ID
SYMMES RD

SHEET P.32 TOTAL 115

BUT-SYMMES

MODEL: 00000_GX221 PAPERSIZE: 34x22 (in.) DATE: 3/31/2025 TIME: 2:03:49 PM USER: MLORENZ
pw:\\pwhdruseas01:HDR_US_East_01\Documents\Butler_County_Transportation_Improvement_District_-_Ohio\BCTID-SymmesRd_Grd_Separation\6.0_CAD_BIM\6.2_WIP\01_Design\000000\400-Engineering\Roadway\Sheets\Alt2 Symmes Road Cross Sections

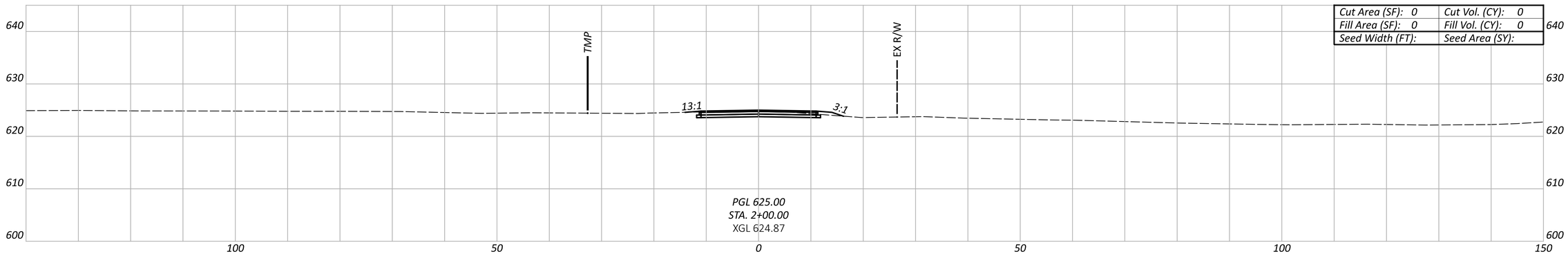

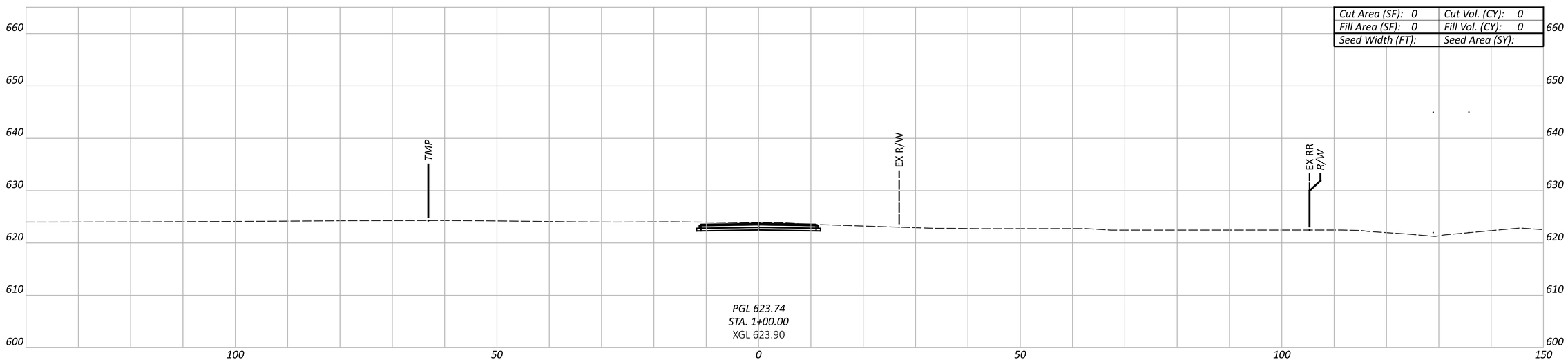

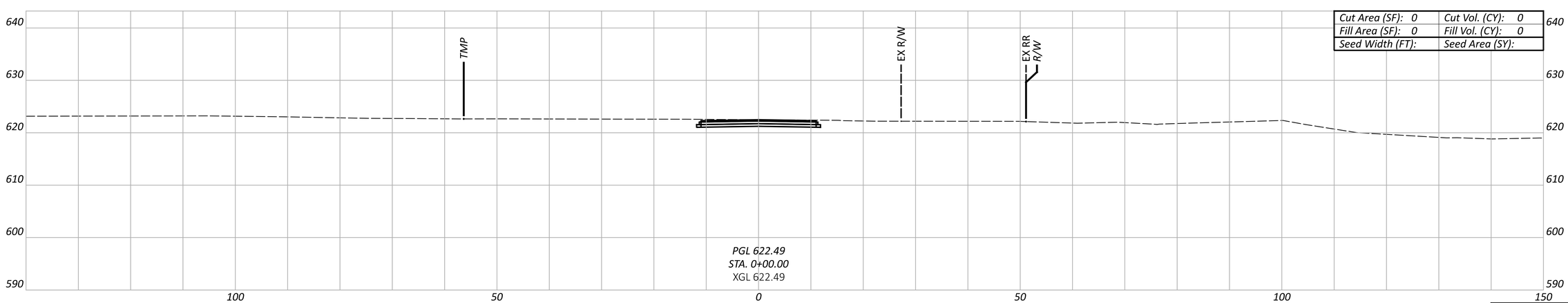

Sheet Totals		
Seeding	Cut	Fill

CROSS SECTIONS - ALTERNATIVE 2
COMMERCIAL DRIVE 1 - STA. 0+00 TO STA. 2+00

DESIGN AGENCY

HDR

DESIGNER
MJL

REVIEWER
PJD 02/21/25

PROJECT ID
SYMMES RD

SHEET P.33 TOTAL 115

BUT-SYMMES

MODEL: 00000_GX222 PAPERSIZE: 34x22 (in.) DATE: 3/31/2025 TIME: 2:03:54 PM USER: MLORENZ
pw:\\pwhdruseas01:HDR_US_East_01\Documents\Butler_County_Transportation_Improvement_District_-_Ohio\BCTID-SymmesRd_Grd_Separation\6.0_CAD_BIM\6.2_WIP\01_Design\000000\400-Engineering\Roadway\Sheets\Alt2 Symmes Road Cross Sections

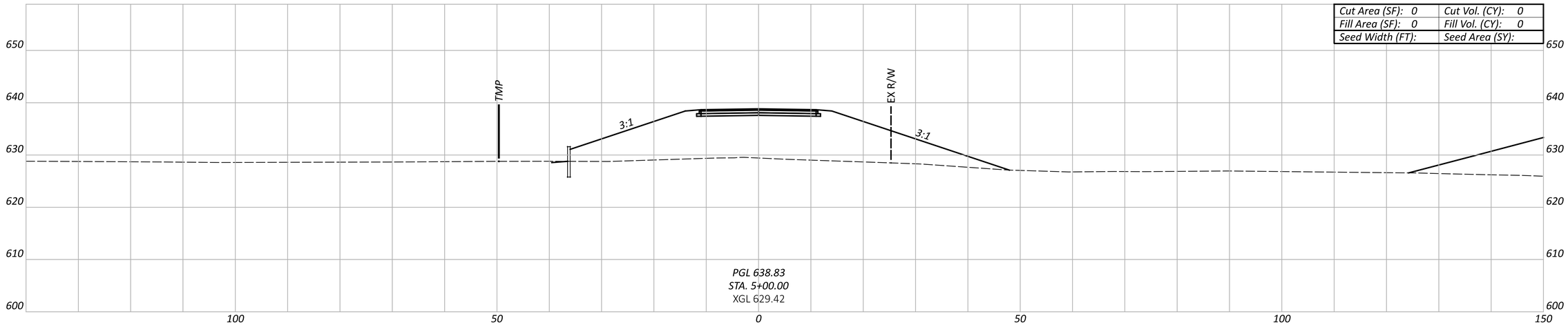

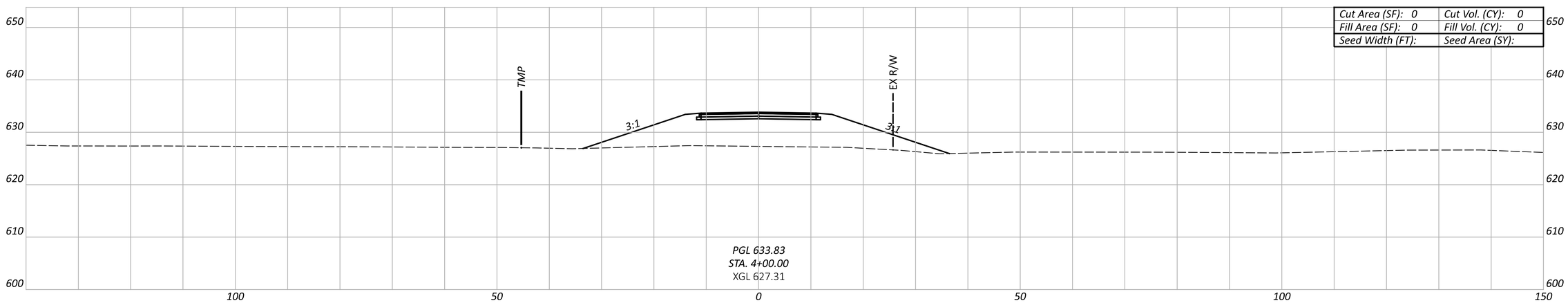

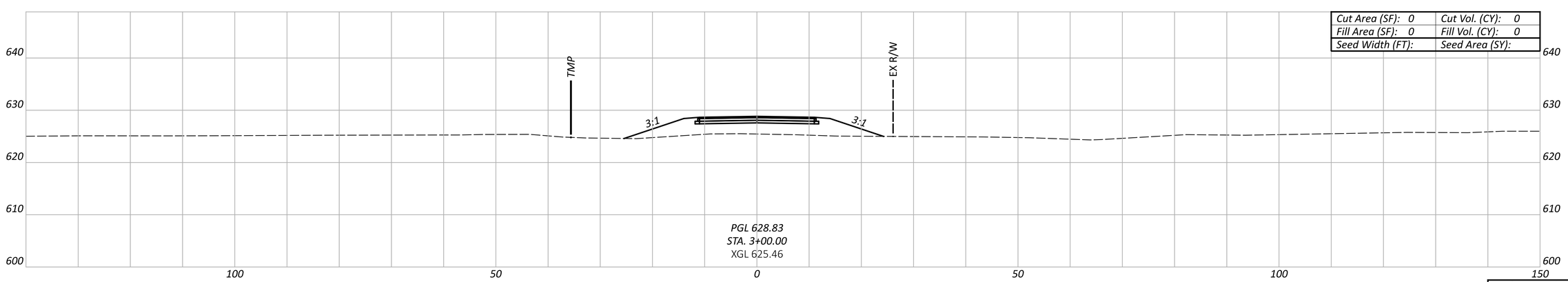

Sheet Totals		
Seeding	Cut	Fill

CROSS SECTIONS - ALTERNATIVE 2
COMMERCIAL DRIVE 1 - STA. 3+00 TO STA. 5+00

DESIGN AGENCY

HDR

DESIGNER
MJL

REVIEWER
PJD 02/21/25

PROJECT ID
SYMMES RD

SHEET P.34 TOTAL 115

BUT-SYMMES

MODEL: 00000_GX223 PAPERSIZE: 34x22 (in.) DATE: 3/31/2025 TIME: 2:03:57 PM USER: MLORENZ
pw:\\pwhdruseas01:HDR_US_East_01\Documents\Butler_County_Transportation_Improvement_District_-_Ohio\BCTID-SymmesRd_Grd_Separation\6.0_CAD_BIM\6.2_WIP\01_Design\000000\400-Engineering\Roadway\Sheets\Alt2 Symmes Road Cross Sections

BUT-SYMMES

MODEL: 00000_GX224 PAPERSIZE: 34x22 (in.) DATE: 3/31/2025 TIME: 2:04:01 PM USER: MLORENZ
pw:\\pwhdruseas01:HDR_US_East_01\Documents\Butler_County_Transportation_Improvement_District_-_Ohio\BCTID-SymmesRd_Grd_Separation\6.0_CAD_BIM\6.2_WIP\01_Design\000000\400-Engineering\Roadway\Sheets\Alt2 Symmes Road Cross Sections

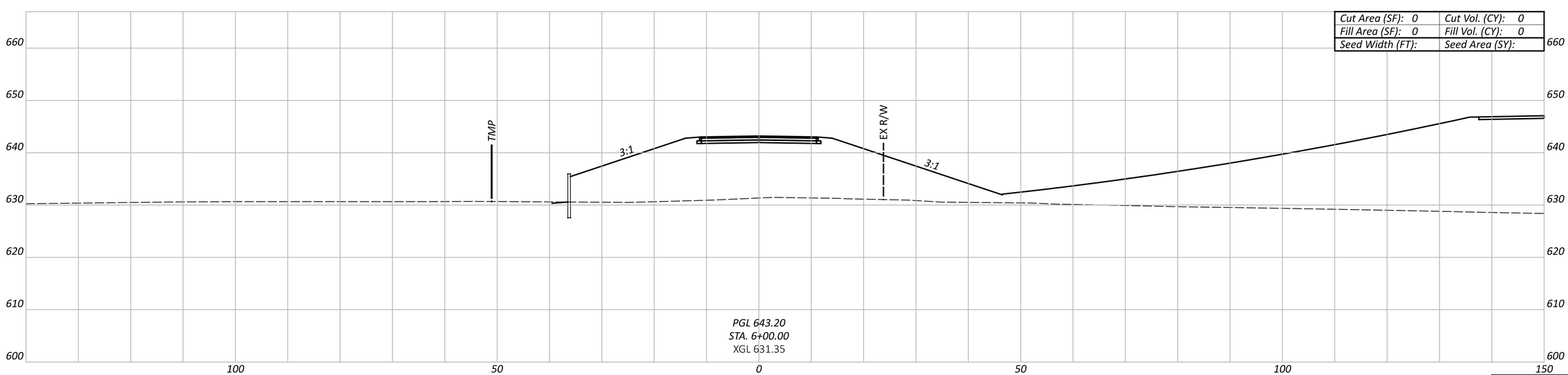

Cut Area (SF): 0	Cut Vol. (CY): 0
Fill Area (SF): 0	Fill Vol. (CY): 0
Seed Width (FT):	Seed Area (SY):

Sheet Totals		
Seeding	Cut	Fill

CROSS SECTIONS - ALTERNATIVE 2
COMMERCIAL DRIVE 1 - STA. 6+00 TO STA. 7+00

DESIGN AGENCY

HDR

DESIGNER
MJL

REVIEWER
PJD 02/21/25

PROJECT ID
SYMMES RD

SHEET P.35 TOTAL 115

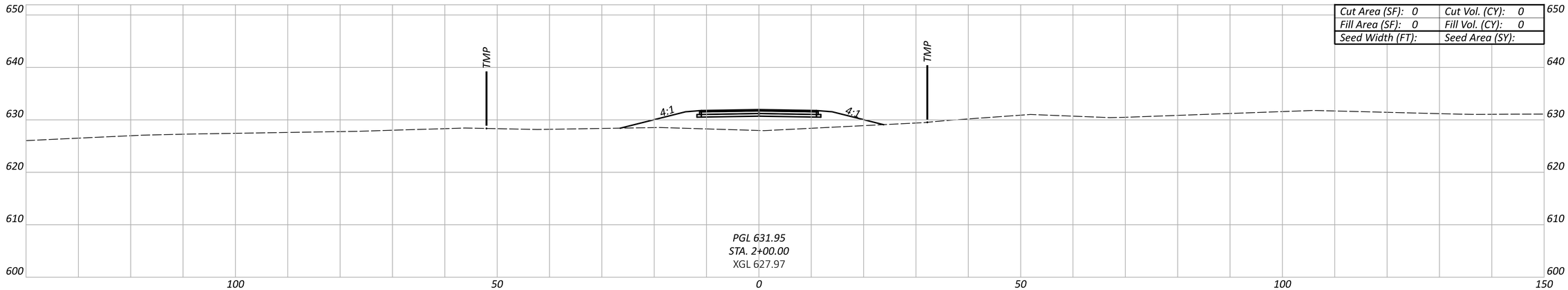

Cut Area (SF): 0	Cut Vol. (CY): 0
Fill Area (SF): 0	Fill Vol. (CY): 0
Seed Width (FT):	Seed Area (SY):

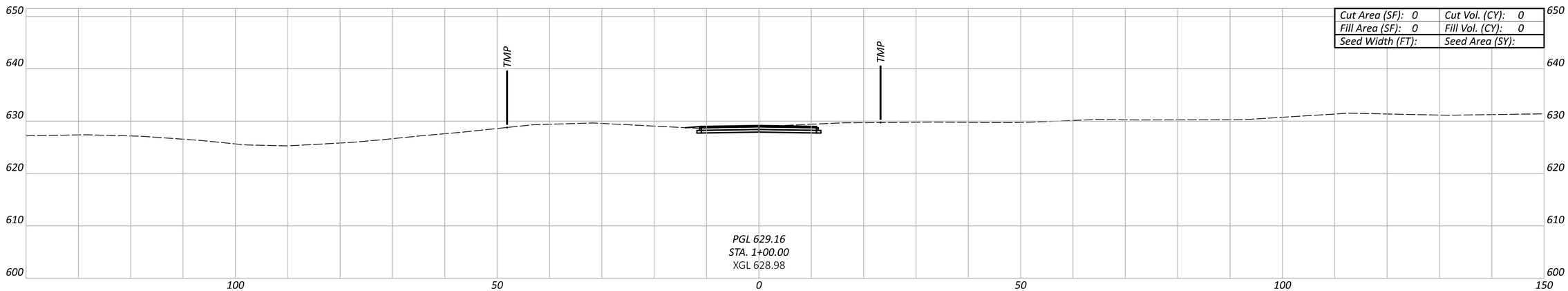

Cut Area (SF): 0	Cut Vol. (CY): 0
Fill Area (SF): 0	Fill Vol. (CY): 0
Seed Width (FT):	Seed Area (SY):

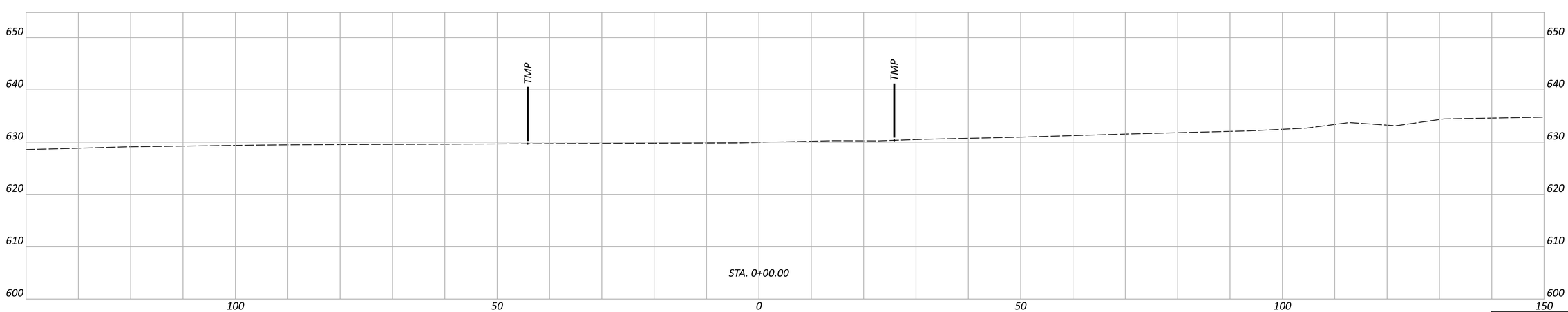

Sheet Totals		
Seeding	Cut	Fill

CROSS SECTIONS - ALTERNATIVE 2
COMMERCIAL DRIVE 2 - STA. 0+00 TO STA. 2+00

DESIGN AGENCY

HDR

DESIGNER
MJL

REVIEWER
PJD 02/21/25

PROJECT ID
SYMMES RD

SHEET P.36 TOTAL 115

BUT-SYMMES

MODEL: 00000_GX225 PAPERSIZE: 34x22 (in.) DATE: 3/31/2025 TIME: 2:04:03 PM USER: MLORENZ
pw:\\pwhdruseas01:HDR_US_East_01\Documents\Butler_County_Transportation_Improvement_District_-_Ohio\BCTID-SymmesRd_Grd_Separation\6.0_CAD_BIM\6.2_WIP\01_Design\000000\400-Engineering\Roadway\Sheets\Alt2 Symmes Road Cross Sections

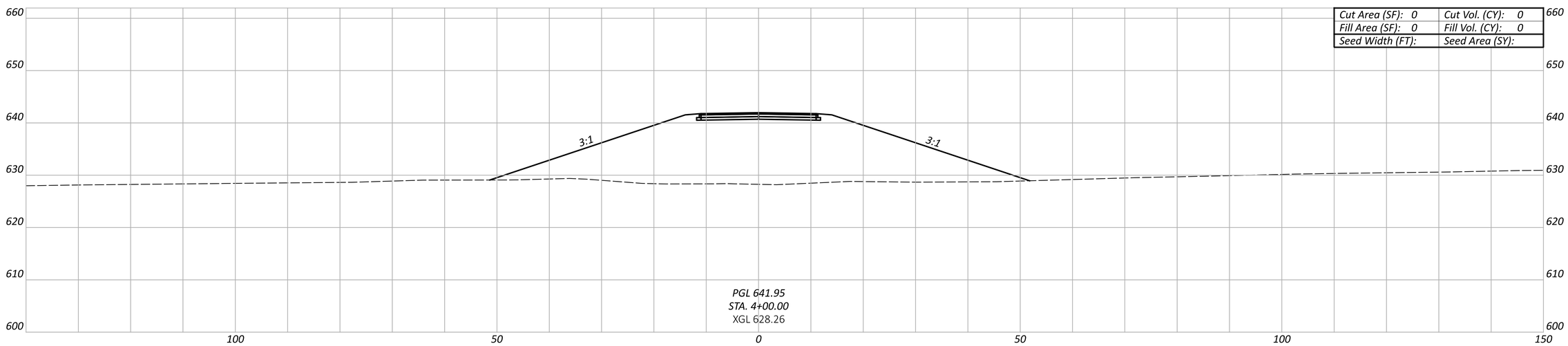

Cut Area (SF): 0	Cut Vol. (CY): 0
Fill Area (SF): 0	Fill Vol. (CY): 0
Seed Width (FT):	Seed Area (SY):

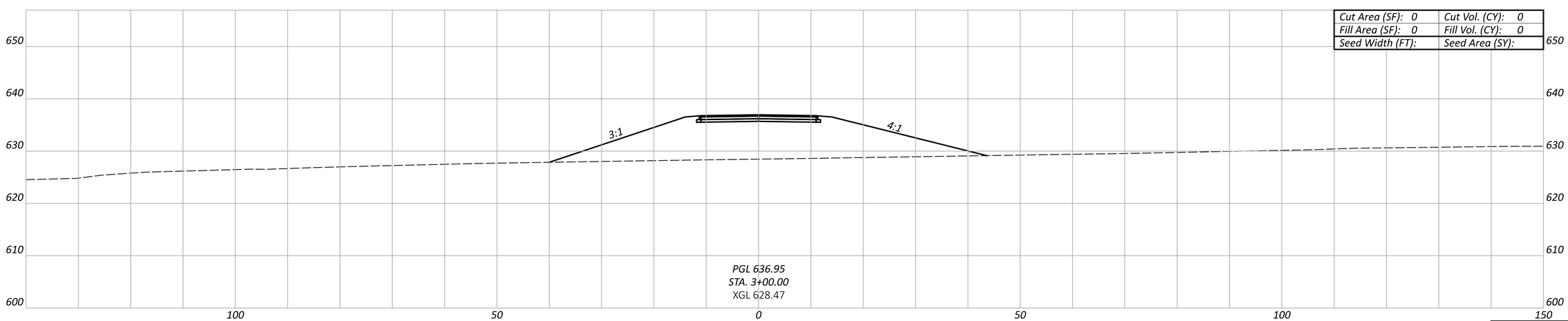

Cut Area (SF): 0	Cut Vol. (CY): 0
Fill Area (SF): 0	Fill Vol. (CY): 0
Seed Width (FT):	Seed Area (SY):

Sheet Totals		
Seeding	Cut	Fill

CROSS SECTIONS - ALTERNATIVE 2
COMMERCIAL DRIVE 2 - STA. 3+00 TO STA. 4+00

DESIGN AGENCY

HDR

DESIGNER
MJL

REVIEWER
PJD 02/21/25

PROJECT ID
SYMMES RD

SHEET P.37 TOTAL 115

BUT-SYMMES

MODEL: 00000_GX36 PAPERSIZE: 34x22 (in.) DATE: 3/31/2025 TIME: 2:04:06 PM USER: MLORENZ
pw:\\pwhdruseas01:HDR_US_East_01\Documents\Butler_County_Transportation_Improvement_District_-_Ohio\BCTID-SymmesRd_Grd_Separation\6.0_CAD_BIM\6.2_WIP\01_Design\000000\400-Engineering\Roadway\Sheets\Alt2 Symmes Road Cross Sections

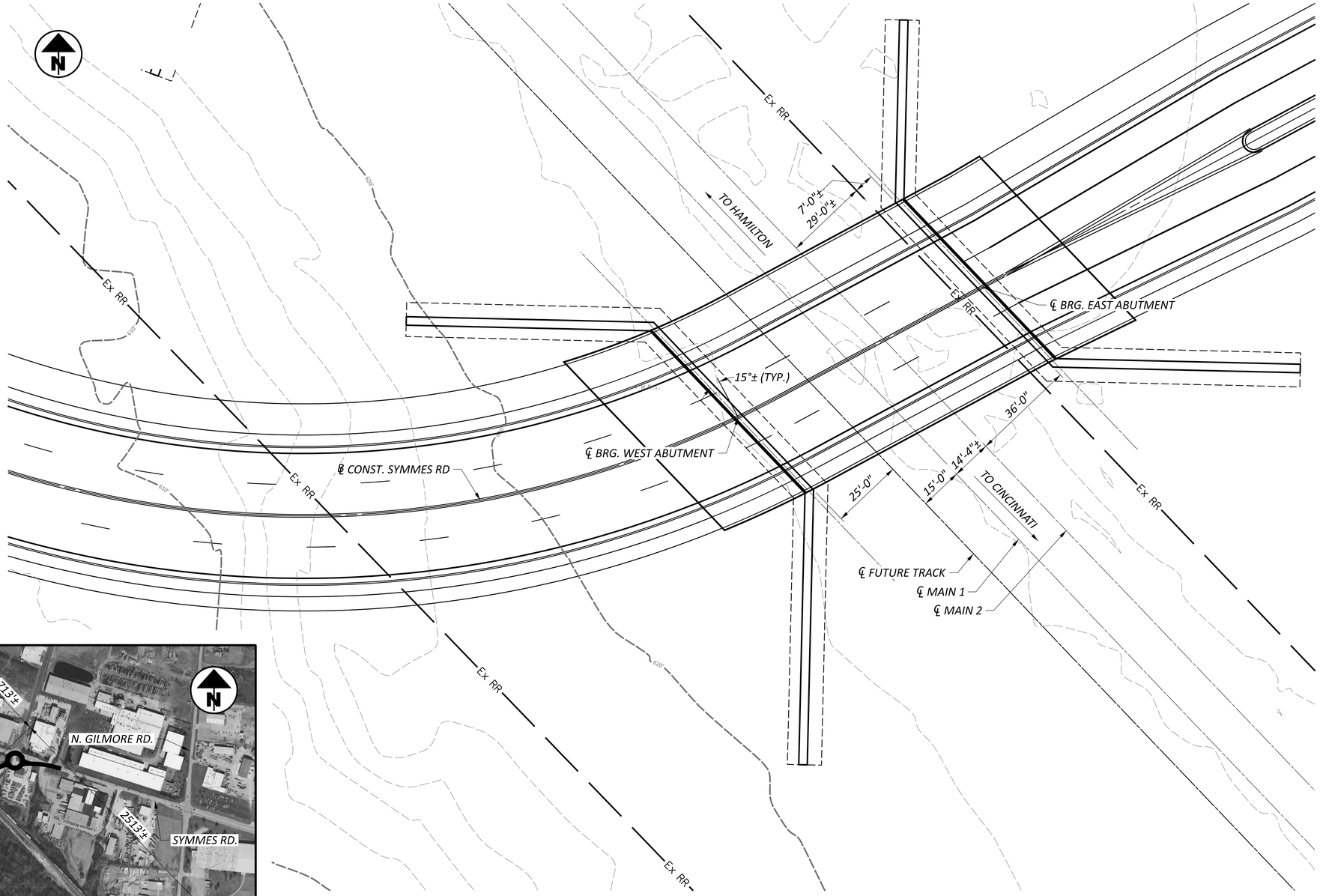

PLAN - ALTERNATIVE 2

0 10' 20' 40'

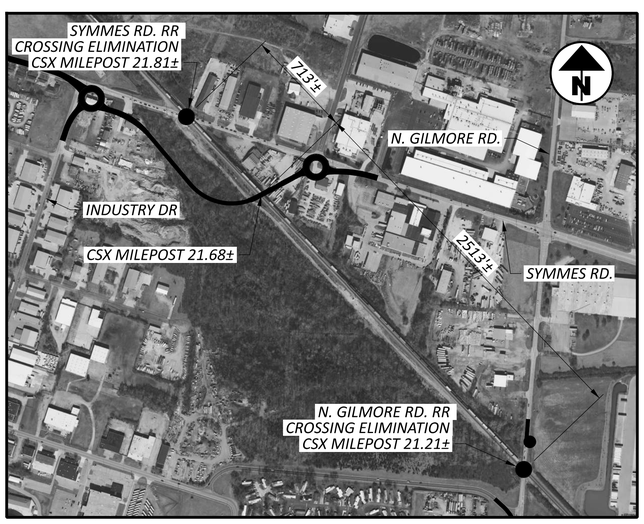

LOCATION MAP

NO SCALE

BUTLER CO. SYMMES RD GRADE SEPARATION
BRIDGE NO. XXX-XX-XX.XX
PRELIMINARY PLAN VIEW - ALTERNATIVE 2

SFN	TBD
DESIGN AGENCY	HDR
DESIGNER	JML
CHECKER	DWW
REVIEWER	PHF 2-25-25
PROJECT ID	SYMMES RD
SUBSET	1
TOTAL	2
SHEET	P.38
TOTAL	115

BUT-SYMMES

MODEL: Plan - ALT 2 PAPERSIZE: 34x22 (in.) DATE: 3/31/2025 TIME: 2:04:30 PM USER: MLORENZ
pw:\\pwhdruseas01:HDR_US_East_01\Documents\Butler_County_Transportation_Improvement_District_-_Ohio\BCTID-SymmesRd_Grd_Separation\6.0_CAD_BIM\6.2_WIP\01_Design\000000\960-Exhibits\20241023_Bridge Exhibits for CSX\20231023_Symmes Rd_Bridge Exhibits.dgn

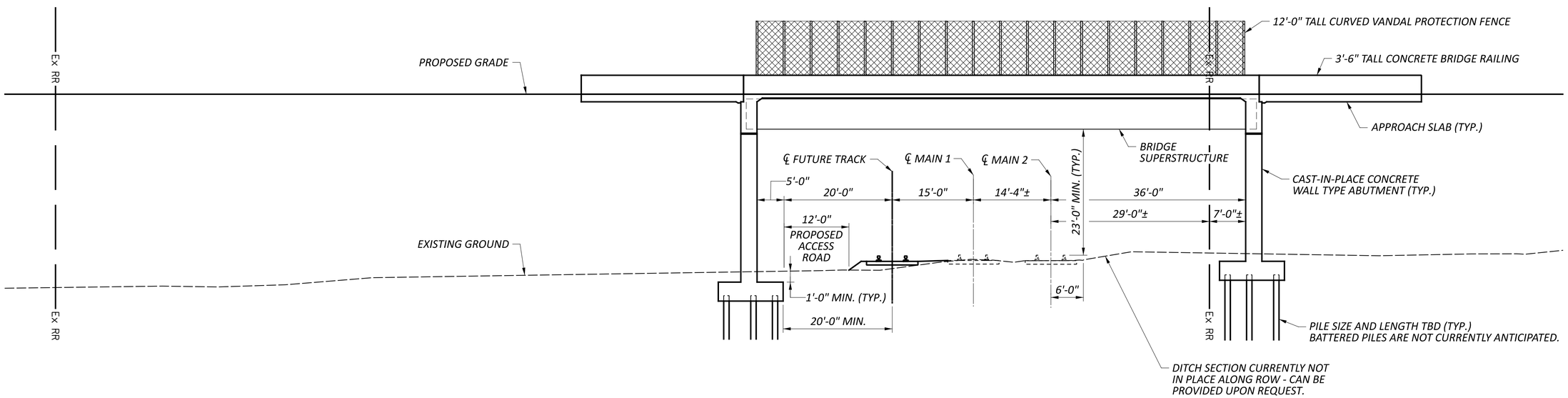

TYPICAL ELEVATION

(WITH FUTURE TRACK AND PROPOSED ACCESS ROAD)
(CUT PERPENDICULAR TO ℄ OF EXISTING TRACKS)

0 10'
5' 20'

NOTES:

1. *IT IS NOT FEASIBLE TO CLEAR SPAN CSX PROPERTY DUE TO GEOMETRIC CONSTRAINTS AND THE OVERALL WIDTH OF THE CSX RIGHT OF WAY WITHIN THE PROJECT LIMITS.*
2. *THE PROPOSED ABUTMENTS ARE LOCATED TO PROVIDE ADEQUATE HORIZONTAL CLEARANCE TO EXISTING AND PROPOSED FUTURE TRACKS. DUE TO GENERAL DESIGN REQUIREMENTS THE ABUTMENTS ARE EXPECTED TO QUALIFY AS HEAVY CONSTRUCTION, AS DEFINED IN THE CSX PUBLIC PROJECT MANUAL. CRASH WALLS ARE NOT ANTICIPATED.*
3. *EXISTING UTILITIES ARE NOT SHOWN. THE LOCATION OF EXISTING UTILITIES WILL BE COORDINATED AND INCORPORATED INTO THE PLANS DURING FINAL DESIGN.*

BUTLER CO. SYMMES RD GRADE SEPARATION
BRIDGE NO. XXX-XX-XX.XX
PRELIMINARY TYPICAL ELEVATION VIEW - ALTERNATIVE 2

SFN	TBD
DESIGN AGENCY	HDR
DESIGNER	JML
CHECKER	DWW
REVIEWER	PHF 2-25-25
PROJECT ID	SYMMES RD
SUBSET	2
TOTAL	2
SHEET	P.39
TOTAL	115

BUT-SYMMES

MODEL: Section - ALT 2 PAPERSIZE: 34x22 (in.) DATE: 3/31/2025 TIME: 2:04:37 PM USER: MLORENZ
pw:\\pwhdruseas01:HDR_US_East_01\Documents\Butler_County_Transportation_Improvement_District_-_Ohio\BCTID-SymmesRd_Grd_Separation\6.0_CAD_BIM\6.2_WIP\01_Design\000000\960-Exhibits\20241023_Bridge Exhibits for CSX\20231023_Symmes Rd_Bridge Exhibits.dgn

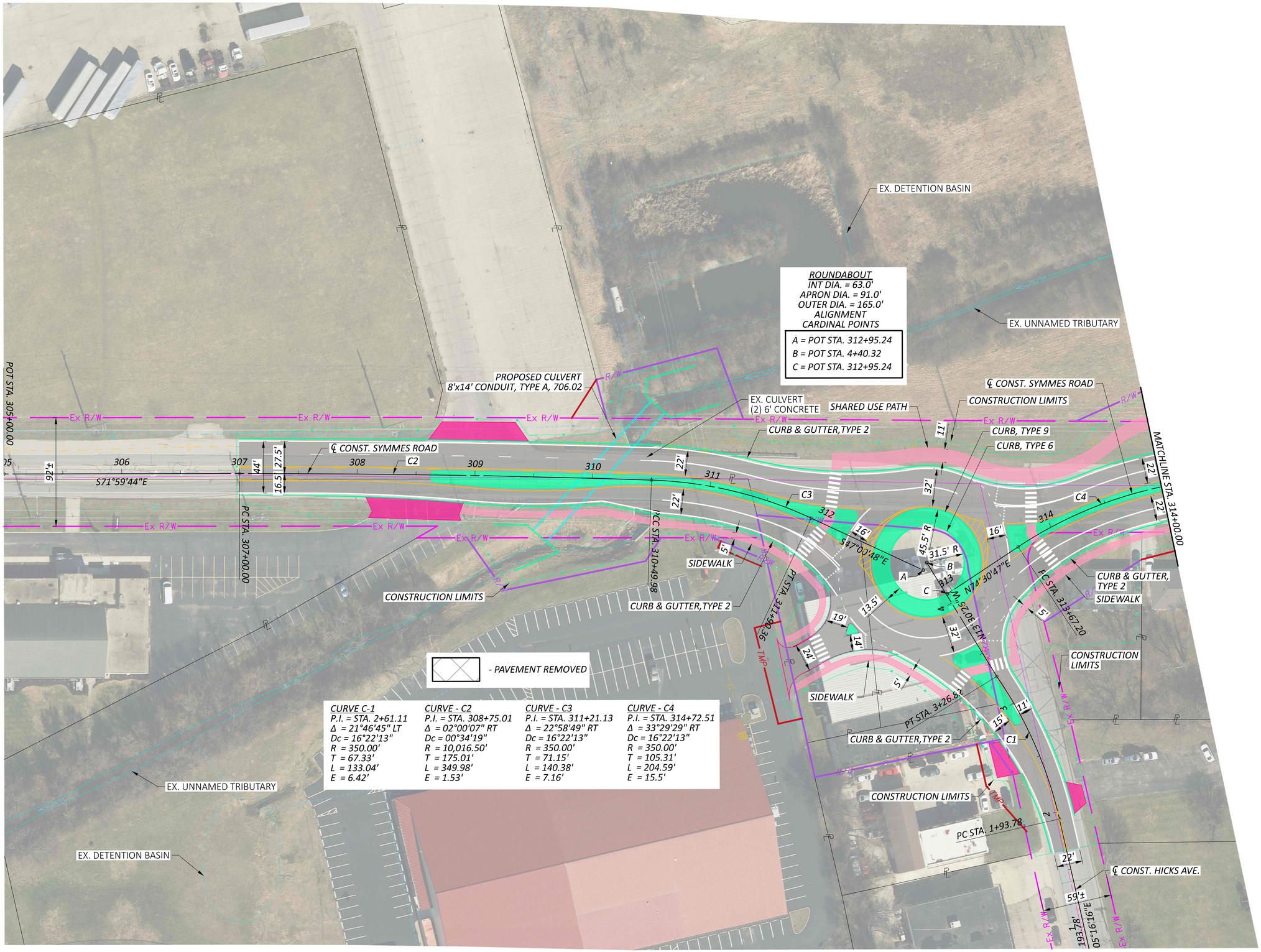

HORIZONTAL SCALE IN FEET
0 20 40 80

PLAN - ALTERNATIVE 3
SYMMES RD. - BEGIN PROJECT TO STA. 314+00

DESIGN AGENCY
HDR

DESIGNER
MJL

REVIEWER
PJD 02/21/25

PROJECT ID
SYMMES RD

SHEET P.40 TOTAL 115

BUT-SYMMES

MODEL: 00000_GP301 PAPERSIZE: 34x22 (in.) DATE: 3/31/2025 TIME: 2:04:53 PM USER: MLORENZ
pw:\\pwhdruseas01:HDR_US_East_01\Documents\Butler_County_Transportation_Improvement_District_-_Ohio\BCTID-SymmesRd_Grd_Separation\6.0_CAD_BIM\6.2_WIP\01_Design\000000\400-Engineering\Roadway\Sheets\Alt 3B Roadway Plan 1

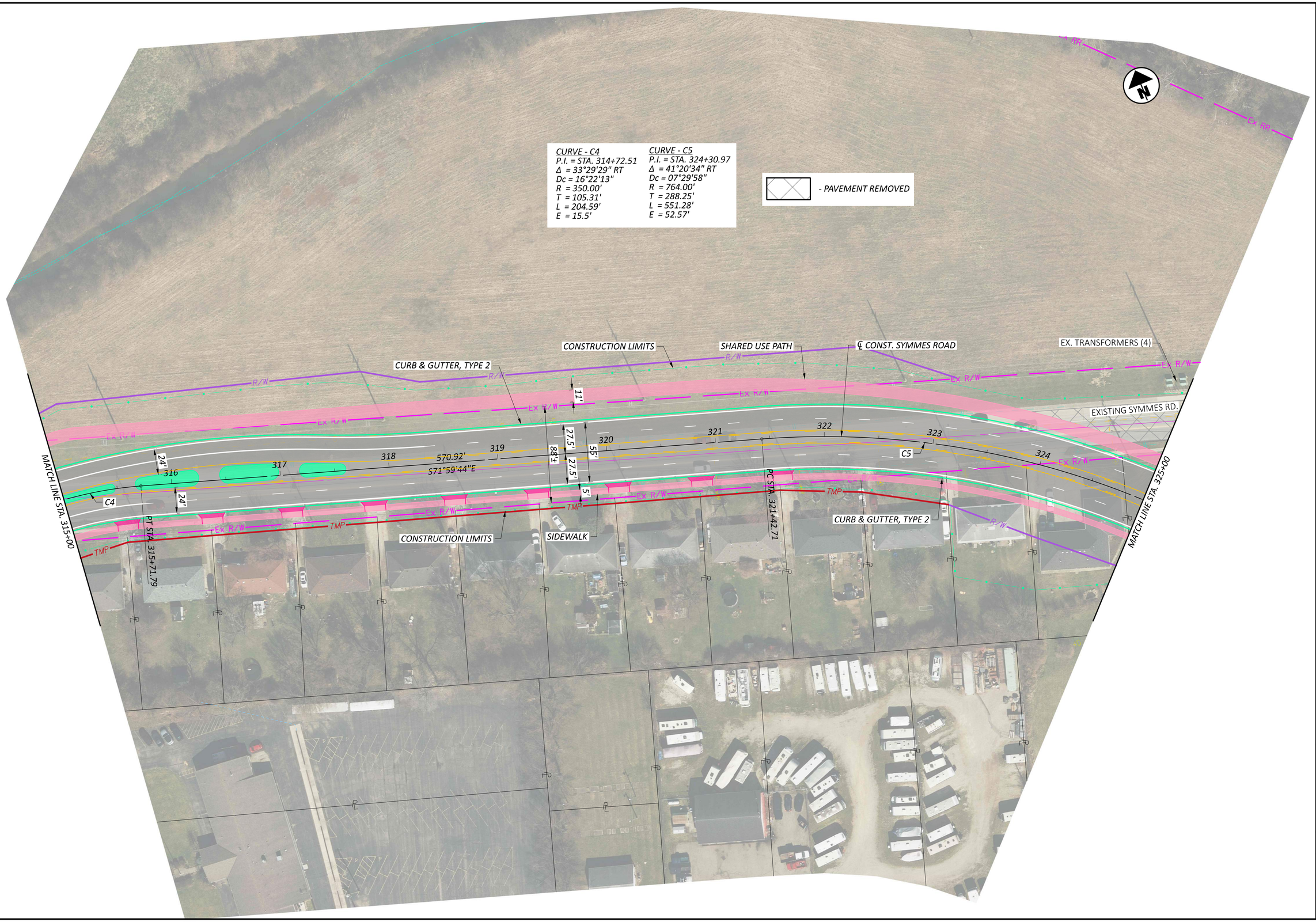

HORIZONTAL SCALE IN FEET
0 20 40 80

PLAN - ALTERNATIVE 3
SYMMES RD. - STA. 315+00 TO STA. 325+00

DESIGN AGENCY
HDR

DESIGNER
MJL

REVIEWER
PJD 02/21/25

PROJECT ID
SYMMES RD

SHEET P.41 TOTAL 115

BUT-SYMMES

MODEL: 00000_GP302 PAPERSIZE: 34x22 (in.) DATE: 3/31/2025 TIME: 2:05:08 PM USER: MLORENZ
pw:\\pwhdruseas01:HDR_US_East_01\Documents\Butler_County_Transportation_Improvement_District_-_Ohio\BCTID-SymmesRd_Grd_Separation\6.0_CAD_BIM\6.2_WIP\01_Design\000000\400-Engineering\Roadway\Sheets\Alt 3B Roadway Plan 2

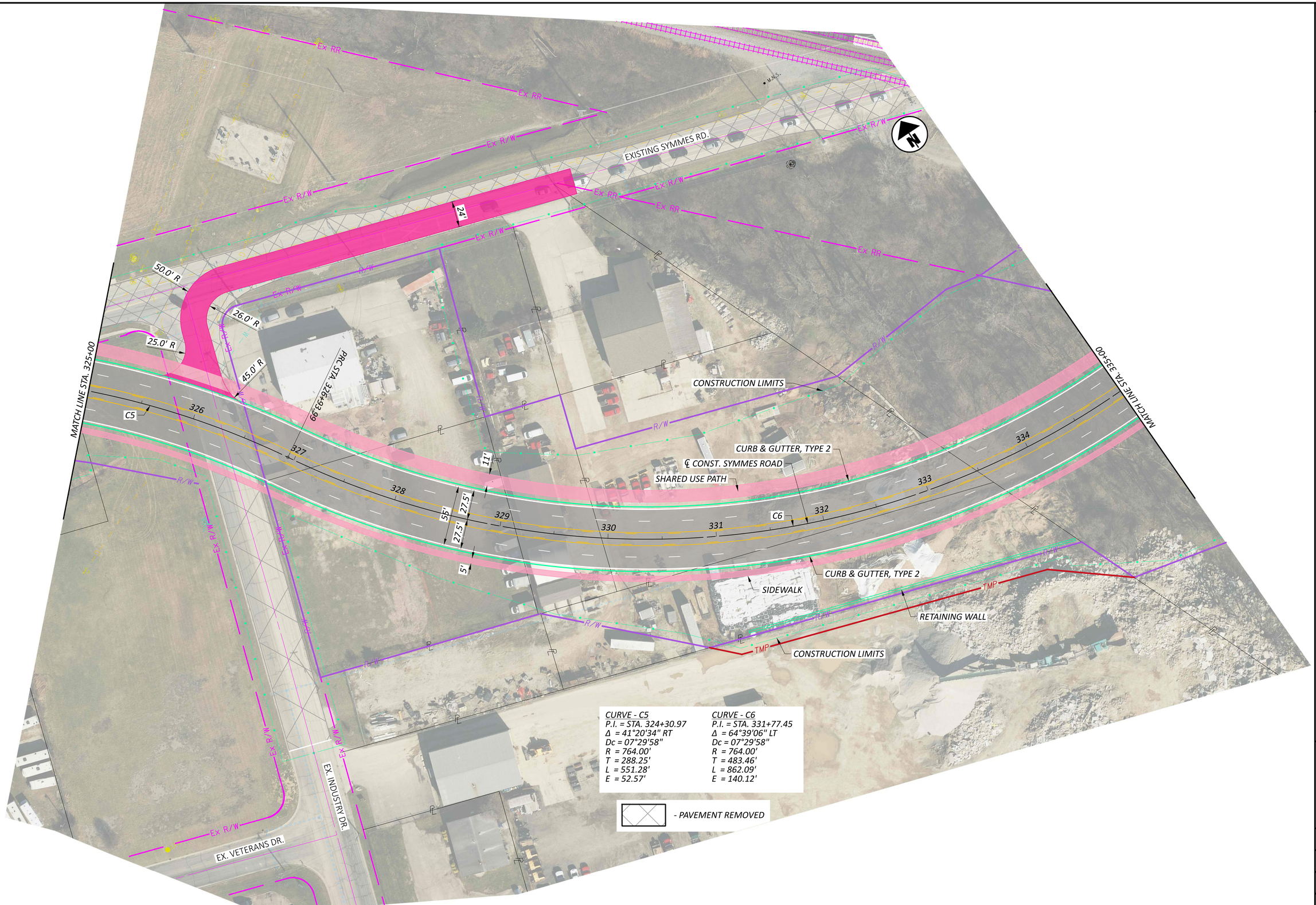

HORIZONTAL SCALE IN FEET
0 20 40 80

PLAN - ALTERNATIVE 3
SYMMES RD. - STA. 325+00 TO STA. 335+00

DESIGN AGENCY
HDR

DESIGNER
MJL

REVIEWER
PJD 02/21/25

PROJECT ID
SYMMES RD

SHEET P.42 TOTAL 115

BUT-SYMMES

MODEL: 00000_GP303 PAPERSIZE: 34x22 (in.) DATE: 3/31/2025 TIME: 2:05:22 PM USER: MLORENZ
pw:\\pwhdruseas01:HDR_US_East_01\Documents\Butler_County_Transportation_Improvement_District_-_Ohio\BCTID-SymmesRd_Grd_Separation\6.0_CAD_BIM\6.2_WIP\01_Design\000000\400-Engineering\Roadway\Sheets\Alt 3B Roadway Plan 3

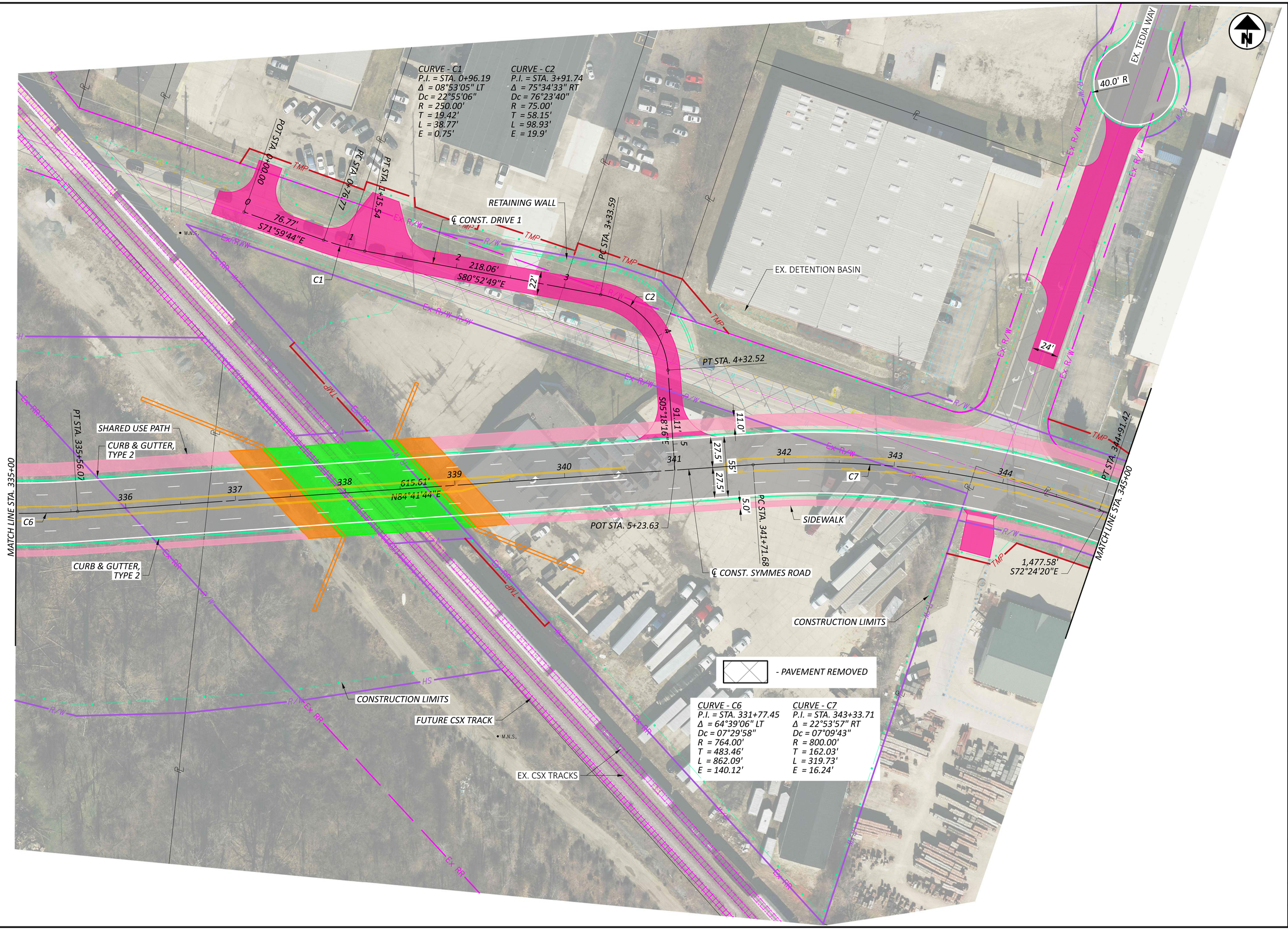

PLAN - ALTERNATIVE 3
SYMMES RD. - STA. 335+00 TO STA. 345+00

DESIGN AGENCY
HDR

DESIGNER
MJL

REVIEWER
PJD 02/21/25

PROJECT ID
SYMMES RD

SHEET P.43 TOTAL 115

BUT-SYMMES

MODEL: 00000_GP304 PAPERSIZE: 34x22 (in.) DATE: 3/31/2025 TIME: 2:05:39 PM USER: MLORENZ
pw:\\pwhdruseas01:HDR_US_East_01\Documents\Butler_County_Transportation_Improvement_District_-_Ohio\BCTID-SymmesRd_Grd_Separation\6.0_CAD_BIM\6.2_WIP\01_Design\000000\400-Engineering\Roadway\Sheets\Alt 3B Roadway Plan 4

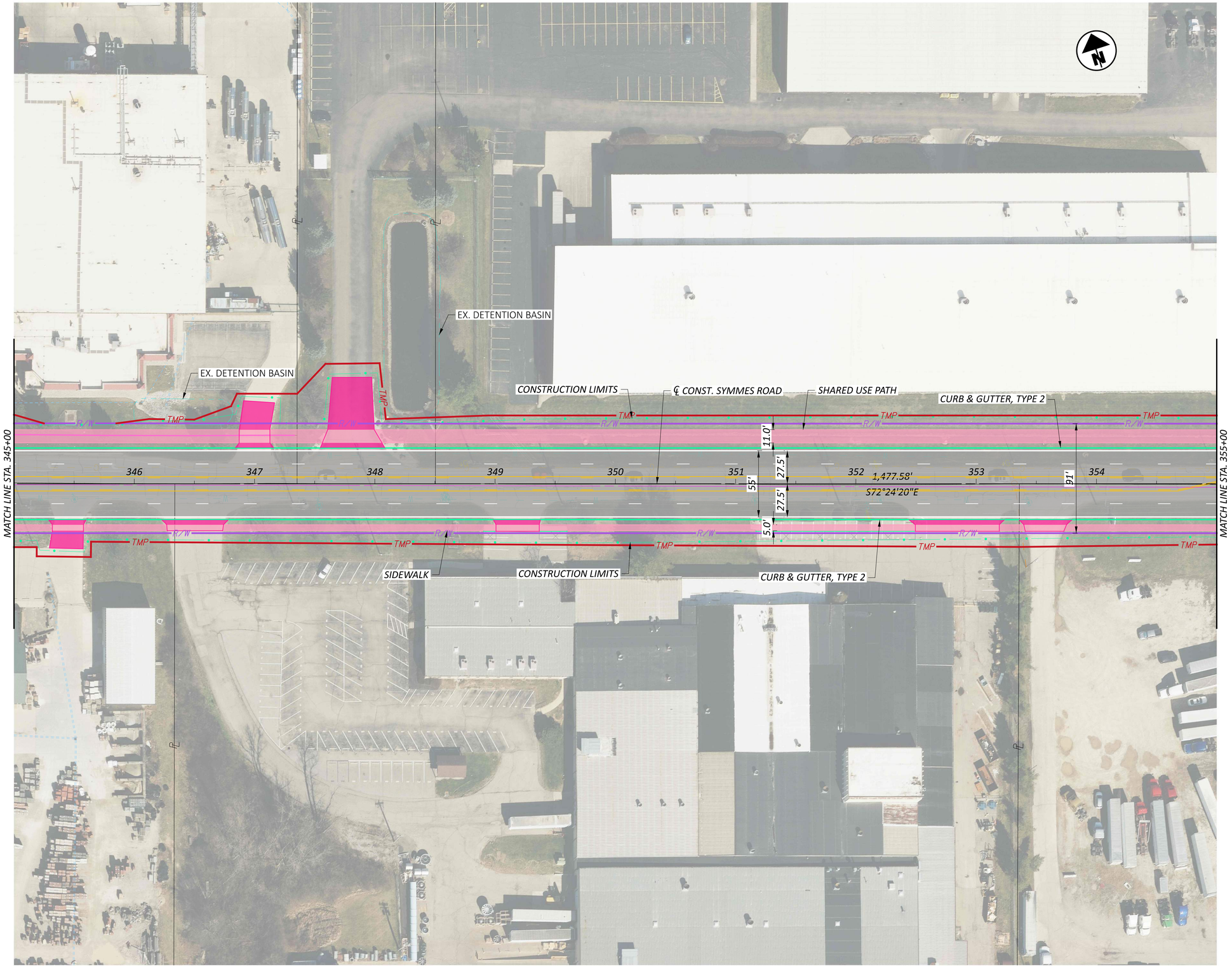

HORIZONTAL SCALE IN FEET
0 20 40 80

PLAN - ALTERNATIVE 3
SYMMES RD. - STA. 315+00 TO STA. 355+00

DESIGN AGENCY
HDR

DESIGNER
MJL

REVIEWER
PJD 02/21/25

PROJECT ID
SYMMES RD

SHEET P.44 TOTAL 115

BUT-SYMMES

MODEL: 00000_GP305 PAPERSIZE: 34x22 (in.) DATE: 3/31/2025 TIME: 2:05:56 PM USER: MLORENZ
pw:\\pwhdruseas01:HDR_US_East_01\Documents\Butler_County_Transportation_Improvement_District_-_Ohio\BCTID-SymmesRd_Grd_Separation\6.0_CAD_BIM\6.2_WIP\01_Design\000000\400-Engineering\Roadway\Sheets\Alt 3B Roadway Plan 5

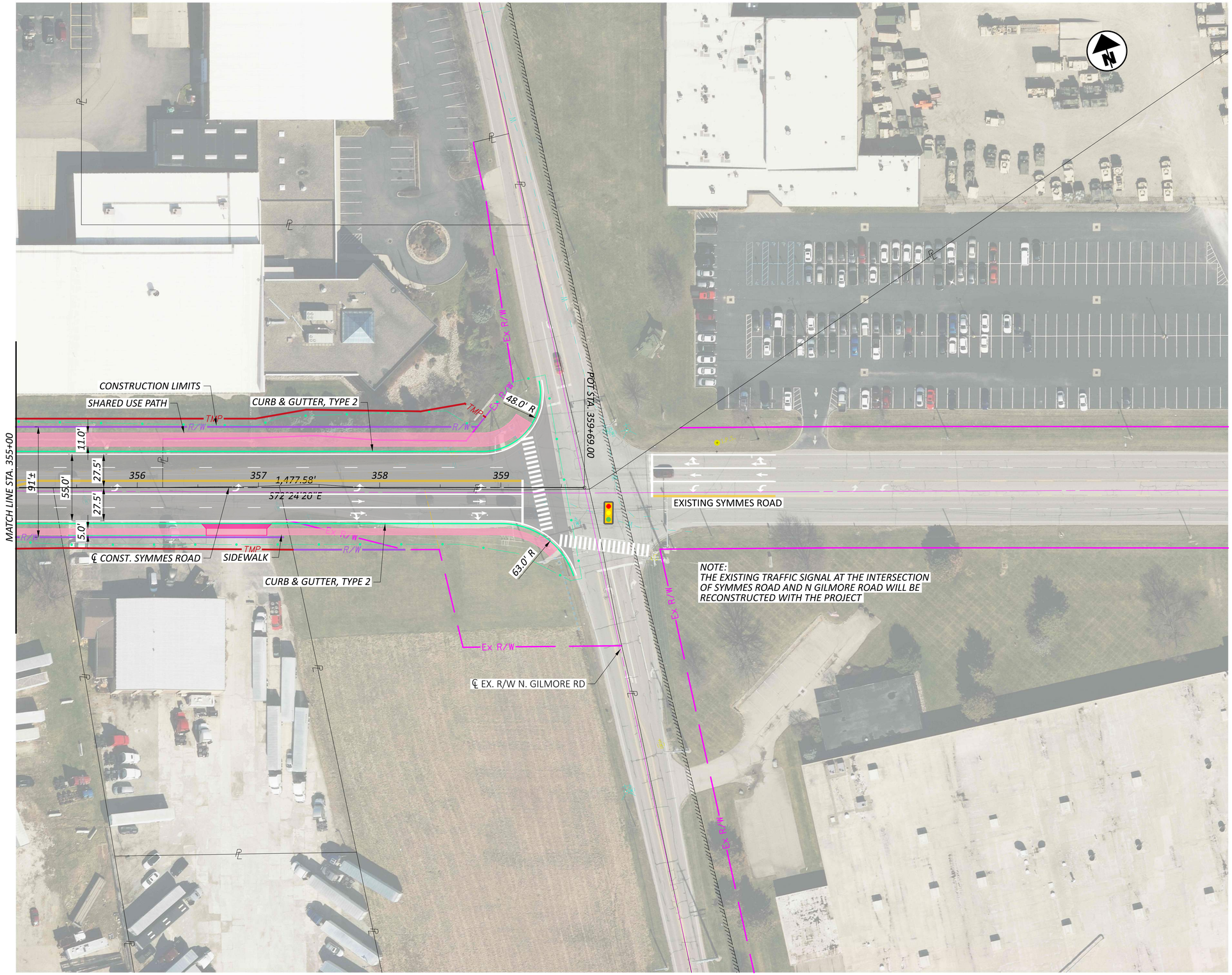

HORIZONTAL SCALE IN FEET
0 20 40 80

PLAN - ALTERNATIVE 3
SYMMES RD. - STA. 355+00 TO END PROJECT

DESIGN AGENCY
HDR

DESIGNER
MJL

REVIEWER
PJD 02/21/25

PROJECT ID
SYMMES RD

SHEET P.45 TOTAL 115

BUT-SYMMES

MODEL: 00000_GP306 PAPERSIZE: 34x22 (in.) DATE: 3/31/2025 TIME: 2:06:10 PM USER: MLORENZ
pw:\\pwhdruseas01:HDR_US_East_01\Documents\Butler_County_Transportation_Improvement_District_-_Ohio\BCTID-SymmesRd_Grd_Separation\6.0_CAD_BIM\6.2_WIP\01_Design\000000\400-Engineering\Roadway\Sheets\Alt 3B Roadway Plan 6

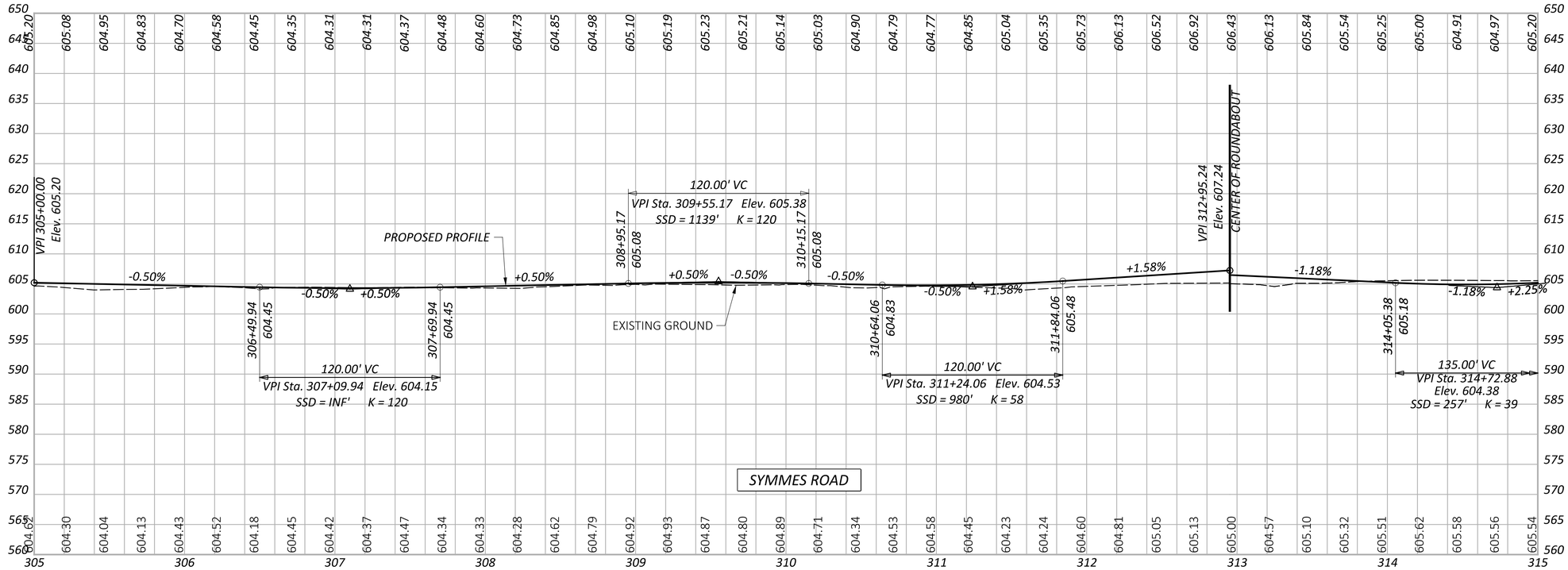

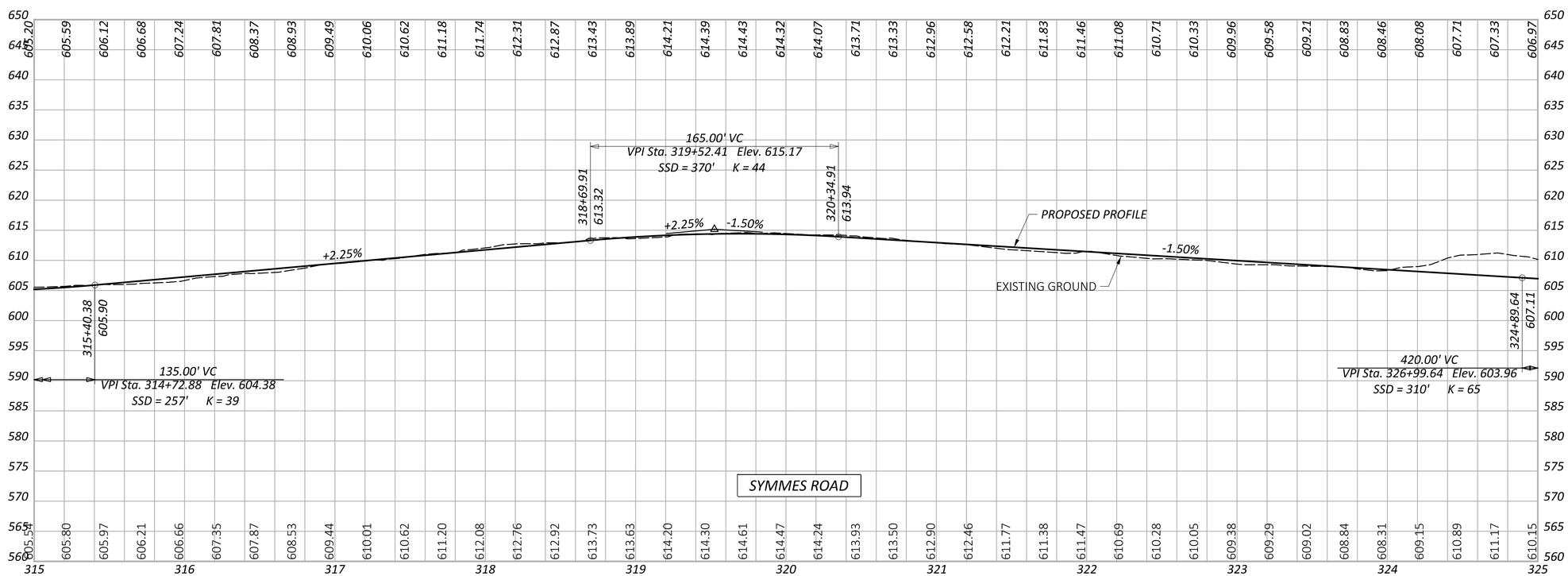

PROFILE - ALTERNATIVE 3
SYMMES ROAD

BUT-SYMMES

MODEL: 00000_GF301 PAPERSIZE: 34x22 (in.) DATE: 3/31/2025 TIME: 2:06:23 PM USER: MLORENZ
pw:\\pwhdruseas01:HDR_US_East_01\Documents\Butler_County_Transportation_Improvement_District_-_Ohio\BCTID-SymmesRd_Grd_Separation\6.0_CAD_BIM\6.2_WIP\01_Design\000000\400-Engineering\Roadway\Sheets\Alt 3B Symmes Road Profile 1

DESIGN AGENCY
HDR

DESIGNER
MJL

REVIEWER
PJD 02/21/25

PROJECT ID
SYMMES RD

SHEET P.46 TOTAL 115

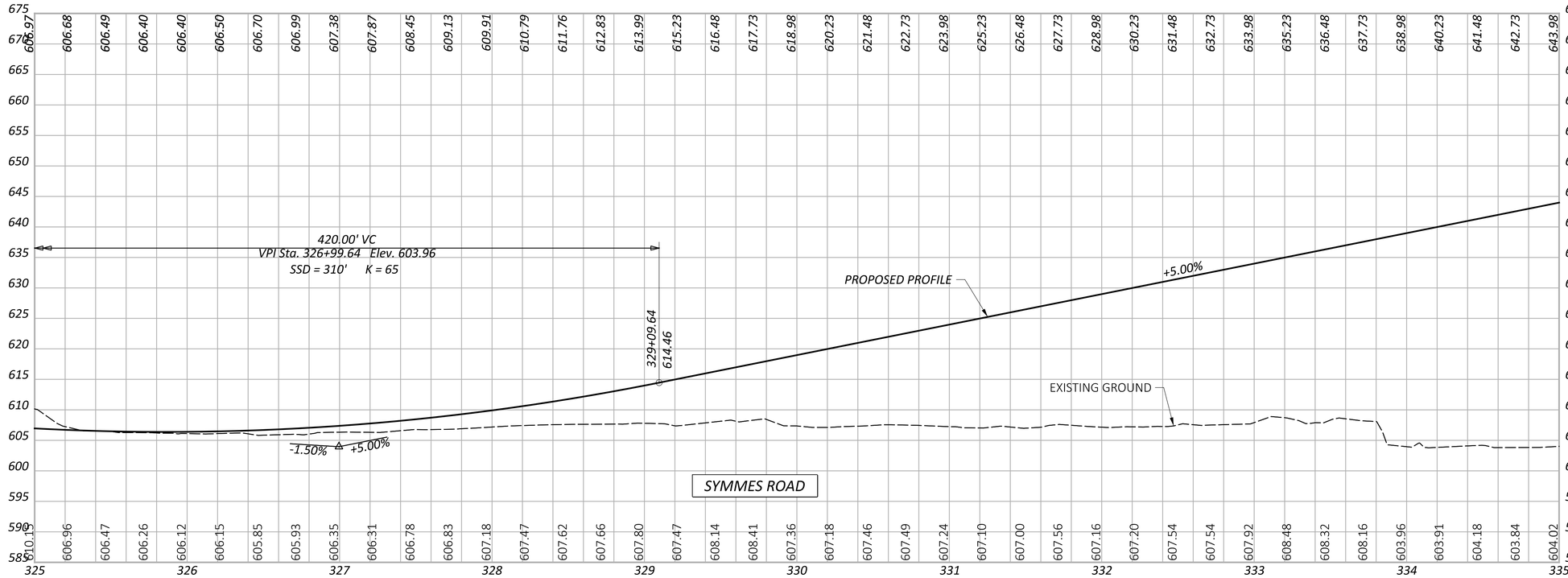

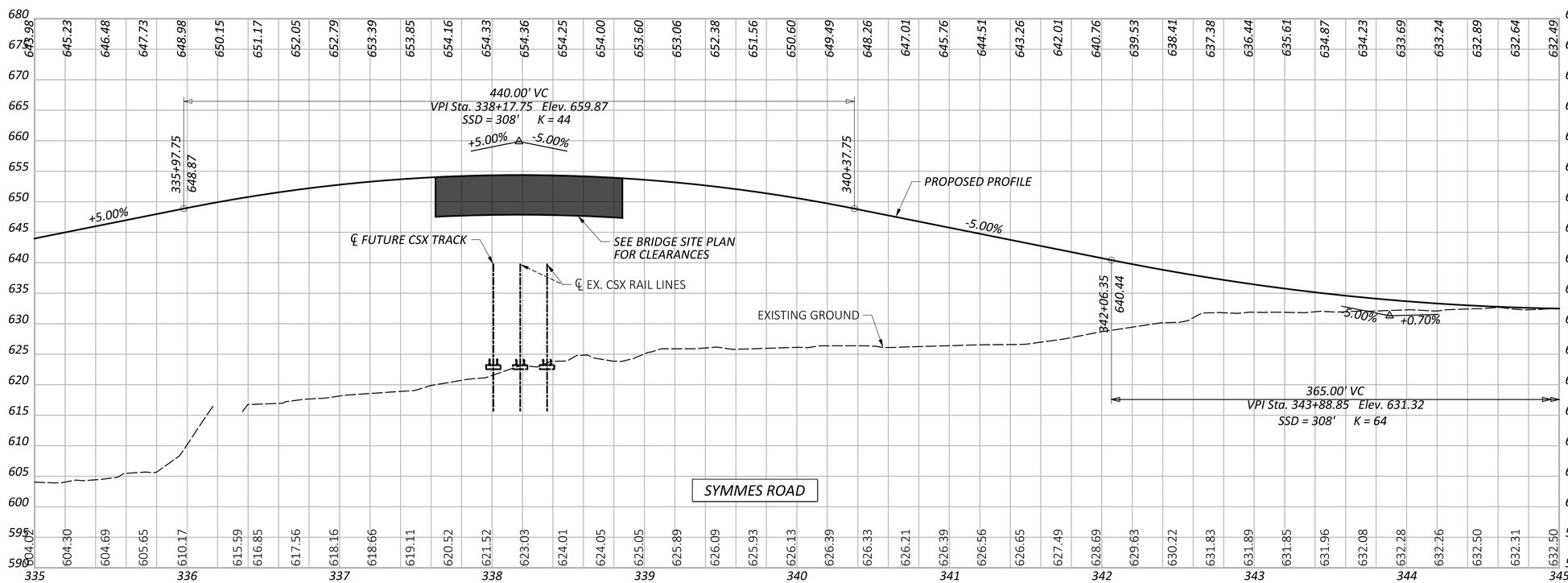

PROFILE - ALTERNATIVE 3
SYMMES ROAD

DESIGN AGENCY
HDR

DESIGNER
MJL

REVIEWER
PJD 02/21/25

PROJECT ID
SYMMES RD

SHEET P.47 TOTAL 115

BUT-SYMMES

MODEL: 00000_GF302 PAPERSIZE: 34x22 (in.) DATE: 3/31/2025 TIME: 2:06:33 PM USER: MLORENZ
pw:\\pwhdruseas01:HDR_US_East_01\Documents\Butler_County_Transportation_Improvement_District_-_Ohio\BCTID-SymmesRd_Grd_Separation\6.0_CAD_BIM\6.2_WIP\01_Design\000000\400-Engineering\Roadway\Sheets\Alt 3B Symmes Road Profile 2

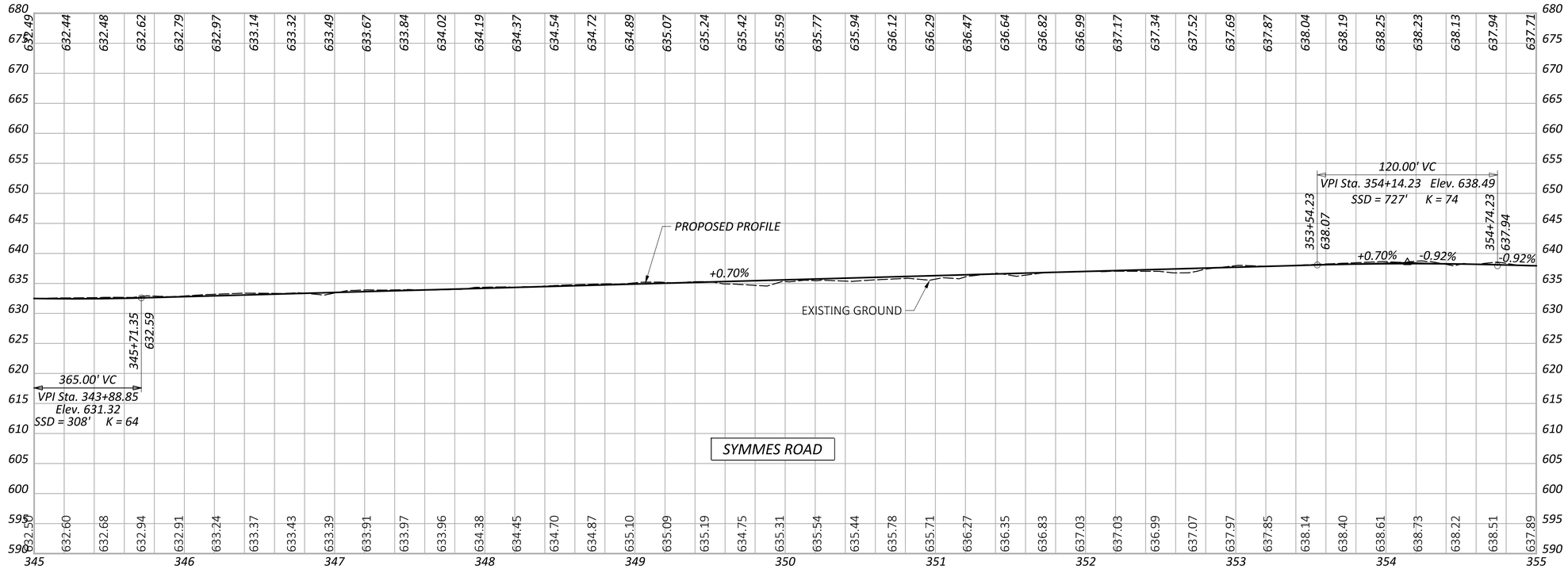

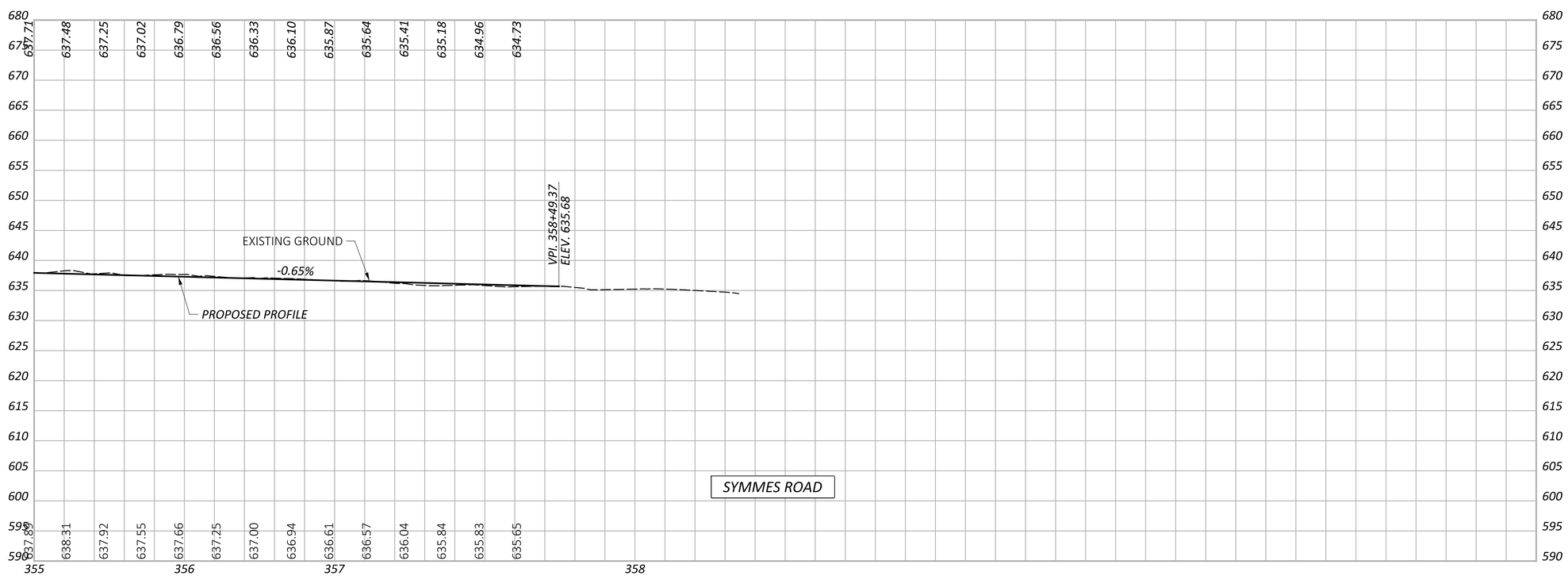

PROFILE - ALTERNATIVE 3
SYMMES ROAD

DESIGN AGENCY

DESIGNER
MJL

REVIEWER
PJD 02/21/25

PROJECT ID
SYMMES RD

SHEET P.48 TOTAL 115

BUT-SYMMES

MODEL: 00000_GF303 PAPERSIZE: 34x22 (in.) DATE: 3/31/2025 TIME: 2:06:45 PM USER: MLORENZ
pw:\\pwhdruseas01:HDR_US_East_01\Documents\Butler_County_Transportation_Improvement_District_-_Ohio\BCTID-SymmesRd_Grd_Separation\6.0_CAD_BIM\6.2_WIP\01_Design\000000\400-Engineering\Roadway\Sheets\Alt 3B Symmes Road Profile 3

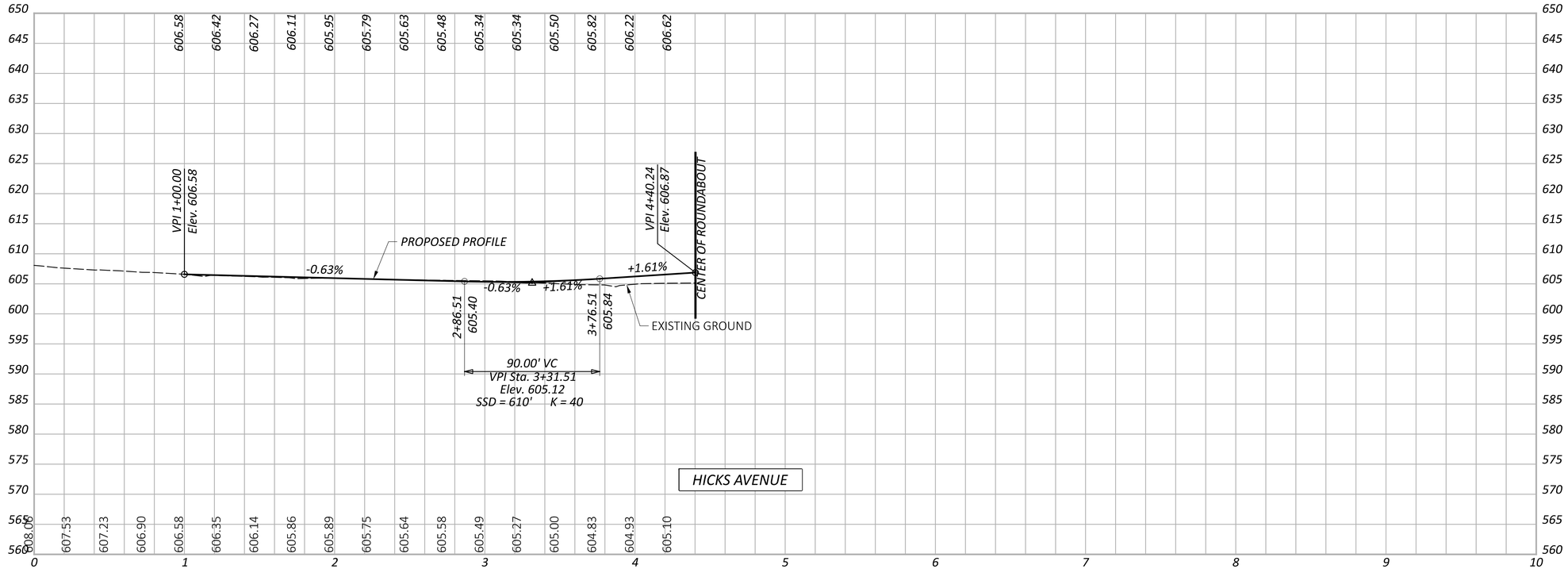

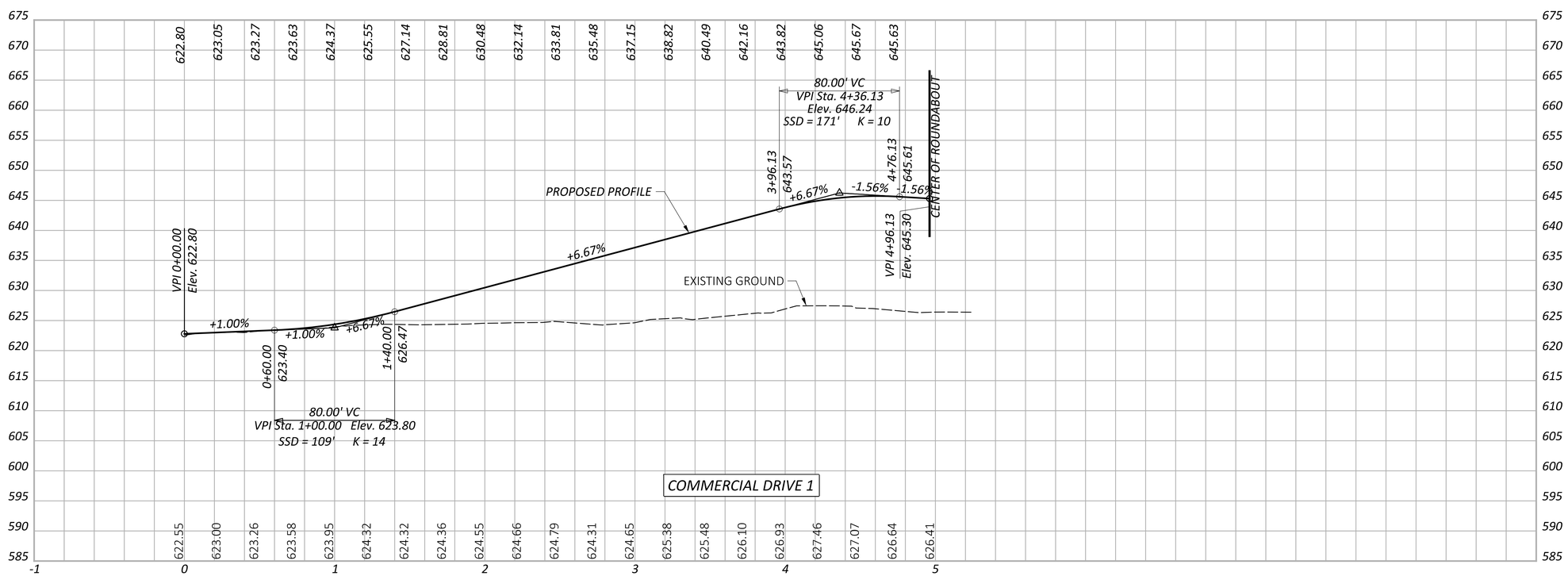

PROFILE - ALTERNATIVE 3
HICKS AVENUE & COMMERCIAL DRIVE 1

BUT-SYMMES

MODEL: 00000_GF304 PAPERSIZE: 34x22 (in.) DATE: 3/31/2025 TIME: 2:06:53 PM USER: MLORENZ
pw:\\pwhdruseas01:HDR_US_East_01\Documents\Butler_County_Transportation_Improvement_District_-_Ohio\BCTID-SymmesRd_Grd_Separation\6.0_CAD_BIM\6.2_WIP\01_Design\000000\400-Engineering\Roadway\Sheets\Alt 3B Side Road Profiles

DESIGN AGENCY
HDR

DESIGNER
MJL

REVIEWER
PJD 02/21/25

PROJECT ID
SYMMES RD

SHEET P.49 TOTAL 115

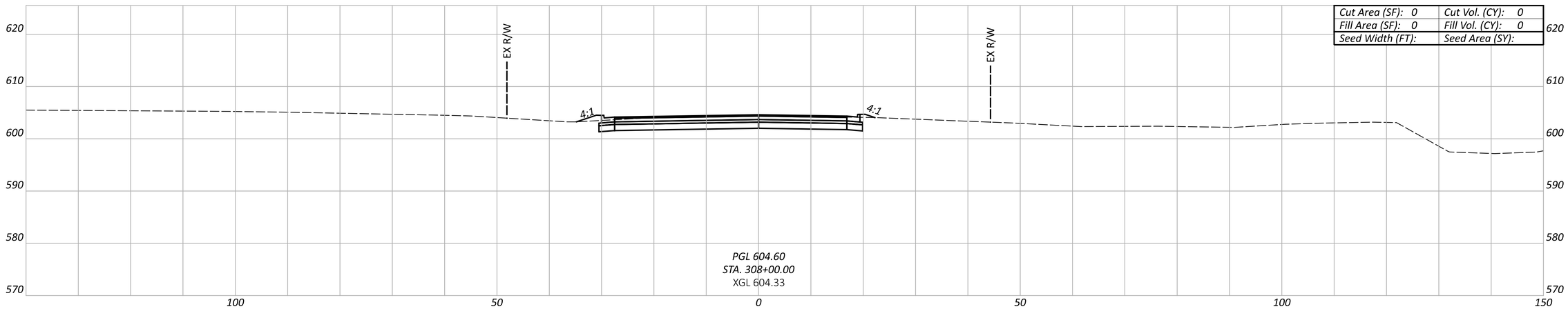

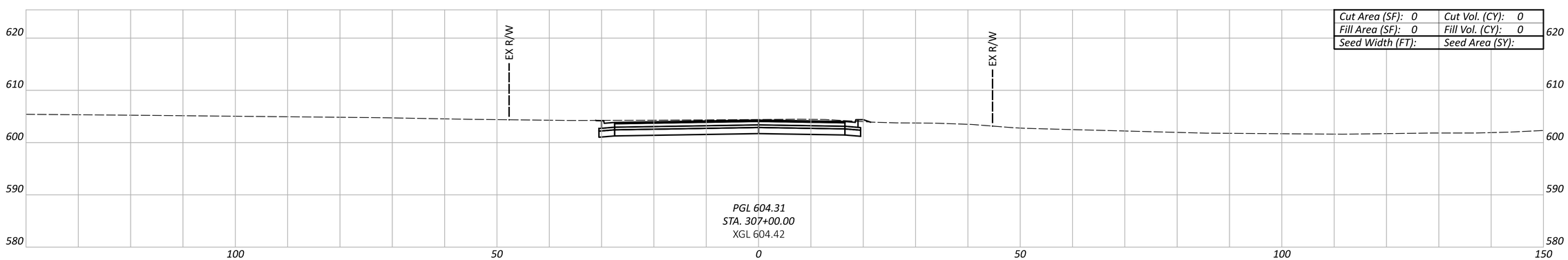

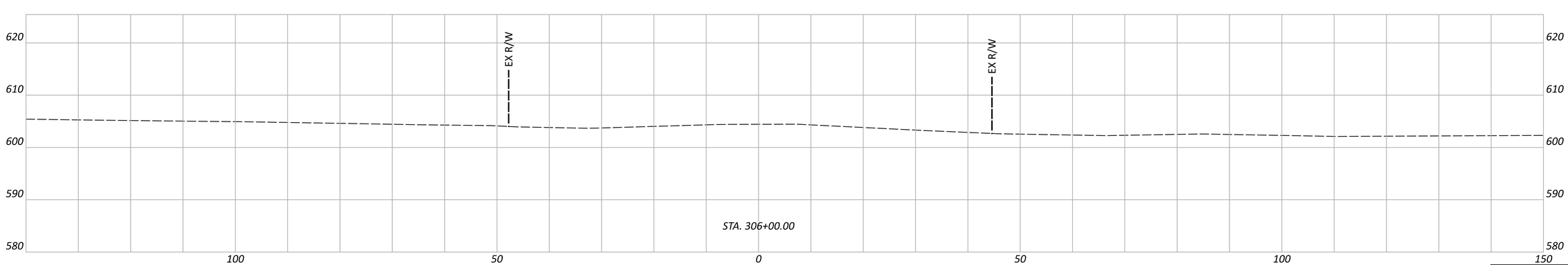

Sheet Totals		
Seeding	Cut	Fill

CROSS SECTIONS - ALTERNATIVE 3
SYMMES RD. - STA. 306+00 TO STA. 308+00

DESIGN AGENCY

DESIGNER
MJL

REVIEWER
PJD 02/21/25

PROJECT ID
SYMMES RD

SHEET P.50 TOTAL 115

BUT-SYMMES

MODEL: 00000_GX301 PAPERSIZE: 34x22 (in.) DATE: 3/31/2025 TIME: 2:07:04 PM USER: MLORENZ
pw:\\pwhdruseas01:HDR_US_East_01\Documents\Butler_County_Transportation_Improvement_District_-_Ohio\BCTID-SymmesRd_Grd_Separation\6.0_CAD_BIM\6.2_WIP\01_Design\000000\400-Engineering\Roadway\Sheets\Alt 3 Symmes Road Cross Sections

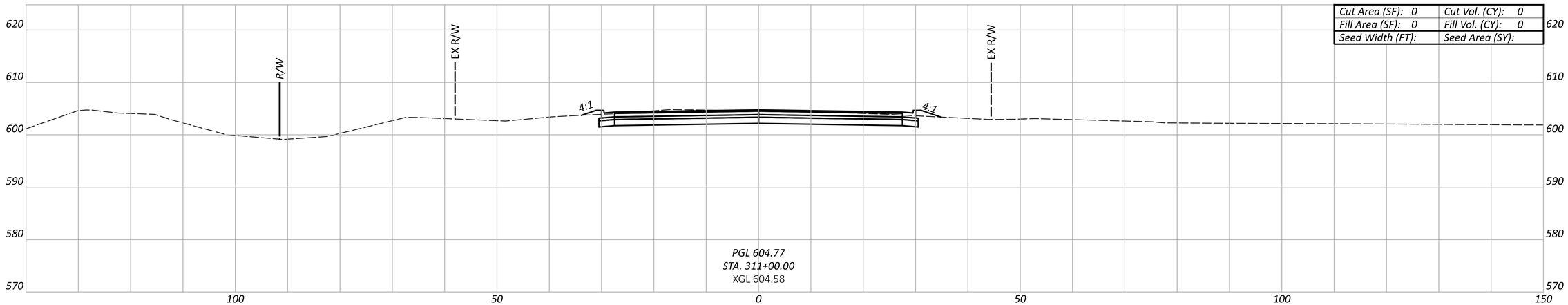

Cut Area (SF): 0	Cut Vol. (CY): 0
Fill Area (SF): 0	Fill Vol. (CY): 0
Seed Width (FT):	Seed Area (SY):

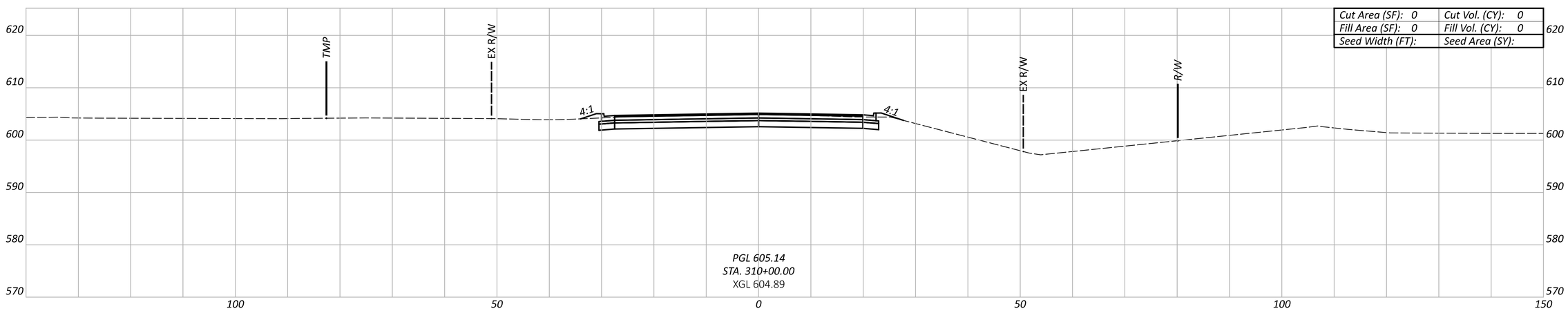

Cut Area (SF): 0	Cut Vol. (CY): 0
Fill Area (SF): 0	Fill Vol. (CY): 0
Seed Width (FT):	Seed Area (SY):

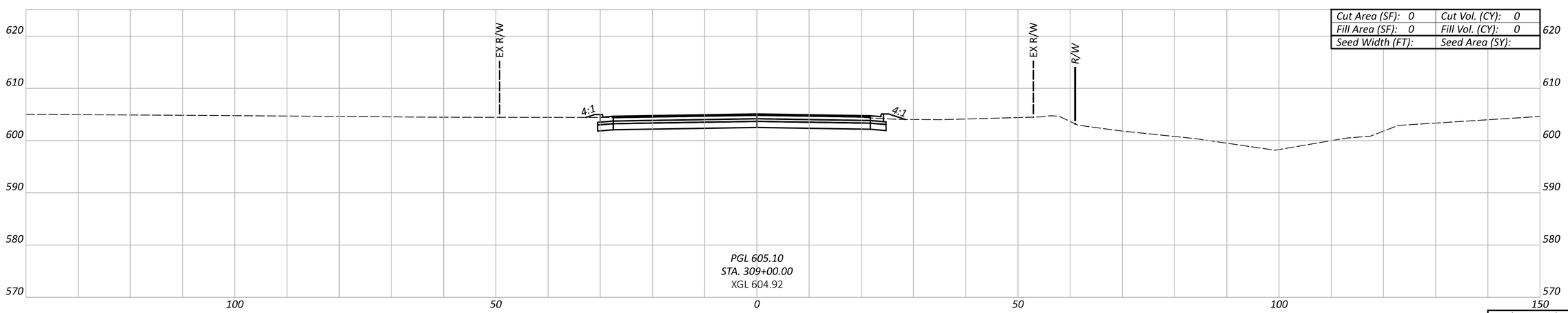

Cut Area (SF): 0	Cut Vol. (CY): 0
Fill Area (SF): 0	Fill Vol. (CY): 0
Seed Width (FT):	Seed Area (SY):

Sheet Totals		
Seeding	Cut	Fill

CROSS SECTIONS - ALTERNATIVE 3
SYMMES RD. - STA. 309+00 TO STA. 311+00

DESIGN AGENCY

HDR

DESIGNER
MJL

REVIEWER
PJD 02/21/25

PROJECT ID
SYMMES RD

SHEET P.51 TOTAL 115

BUT-SYMMES

MODEL: 00000_GX302 PAPERSIZE: 34x22 (in.) DATE: 3/31/2025 TIME: 2:07:07 PM USER: MLORENZ
pw:\\pwhdruseas01:HDR_US_East_01\Documents\Butler_County_Transportation_Improvement_District_-_Ohio\BCTID-SymmesRd_Grd_Separation\6.0_CAD_BIM\6.2_WIP\01_Design\000000\400-Engineering\Roadway\Sheets\Alt 3 Symmes Road Cross Sections

BUT-SYMMES

MODEL: 00000_GX303 PAPERSIZE: 34x22 (in.) DATE: 3/31/2025 TIME: 2:07:10 PM USER: MLORENZ
pw:\\pwhdruseas01:HDR_US_East_01\Documents\Butler_County_Transportation_Improvement_District_-_Ohio\BCTID-SymmesRd_Grd_Separation\6.0_CAD_BIM\6.2_WIP\01_Design\000000\400-Engineering\Roadway\Sheets\Alt 3 Symmes Road Cross Sections

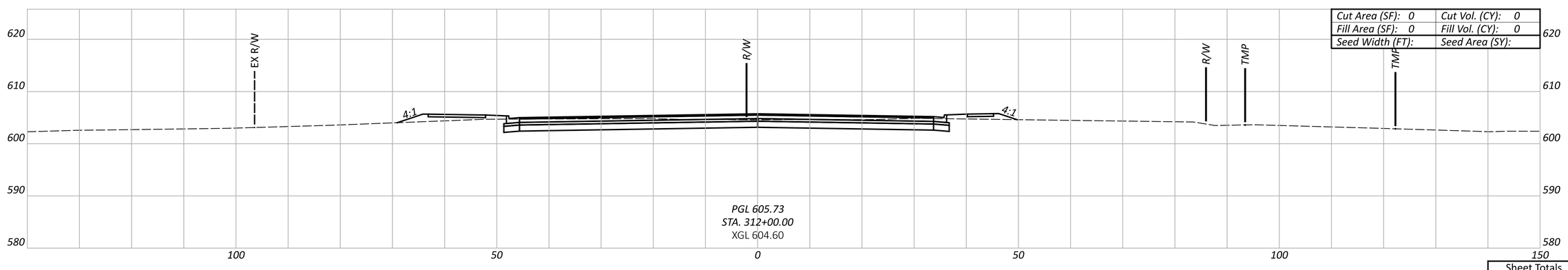

Cut Area (SF): 0	Cut Vol. (CY): 0
Fill Area (SF): 0	Fill Vol. (CY): 0
Seed Width (FT):	Seed Area (SY):

Sheet Totals		
Seeding	Cut	Fill

CROSS SECTIONS - ALTERNATIVE 3
SYMMES RD. - STA. 312+00

DESIGN AGENCY

HDR

DESIGNER
MJL

REVIEWER
PJD 02/21/25

PROJECT ID
SYMMES RD

SHEET P.52 TOTAL 115

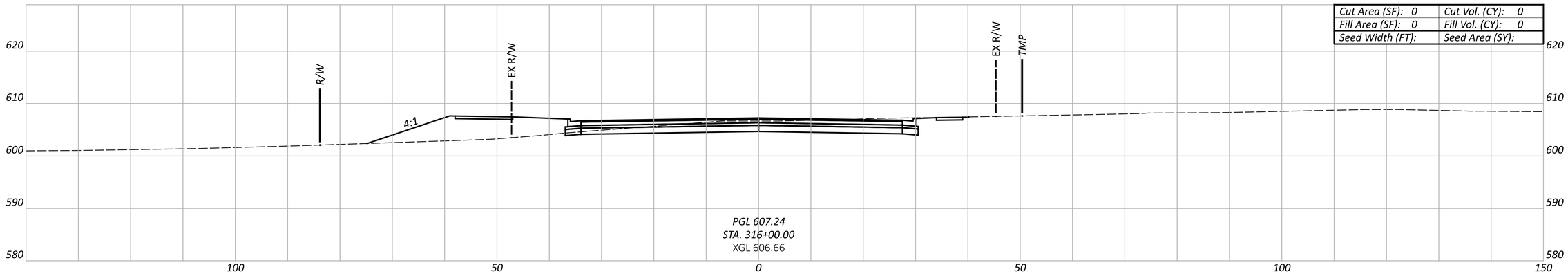

Cut Area (SF): 0	Cut Vol. (CY): 0
Fill Area (SF): 0	Fill Vol. (CY): 0
Seed Width (FT):	Seed Area (SY):

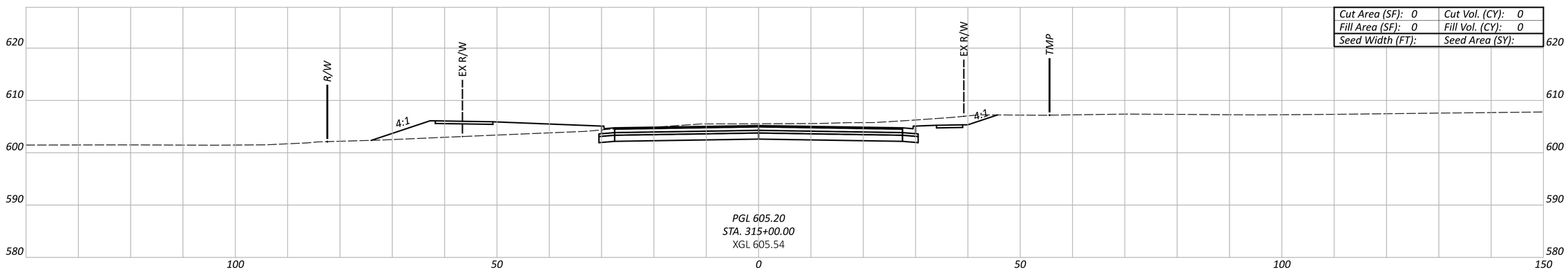

Cut Area (SF): 0	Cut Vol. (CY): 0
Fill Area (SF): 0	Fill Vol. (CY): 0
Seed Width (FT):	Seed Area (SY):

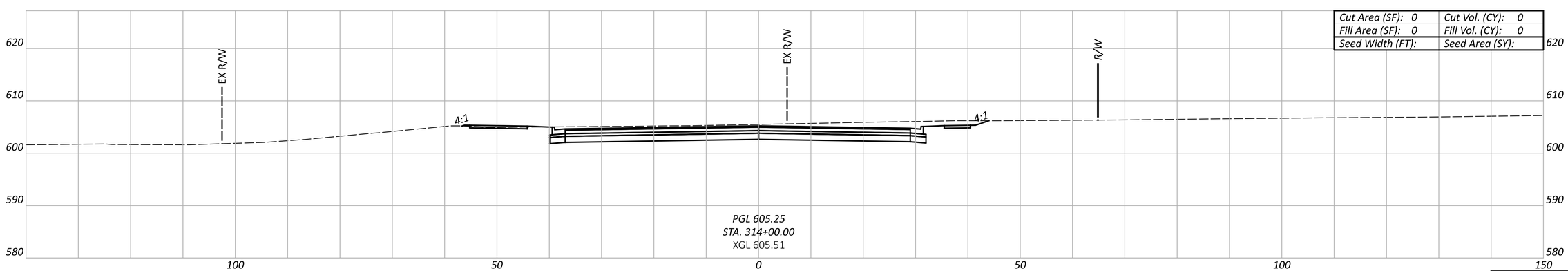

Cut Area (SF): 0	Cut Vol. (CY): 0
Fill Area (SF): 0	Fill Vol. (CY): 0
Seed Width (FT):	Seed Area (SY):

Sheet Totals		
Seeding	Cut	Fill

CROSS SECTIONS - ALTERNATIVE 3
SYMMES RD. - STA. 314+00 TO STA. 316+00

DESIGN AGENCY

HDR

DESIGNER
MJL

REVIEWER
PJD 02/21/25

PROJECT ID
SYMMES RD

SHEET P.53 TOTAL 115

BUT-SYMMES

MODEL: 00000_GX304 PAPERSIZE: 34x22 (in.) DATE: 3/31/2025 TIME: 2:07:12 PM USER: MLORENZ
pw:\\pwhdruseas01:HDR_US_East_01\Documents\Butler_County_Transportation_Improvement_District_-_Ohio\BCTID-SymmesRd_Grd_Separation\6.0_CAD_BIM\6.2_WIP\01_Design\000000\400-Engineering\Roadway\Sheets\Alt 3 Symmes Road Cross Sections

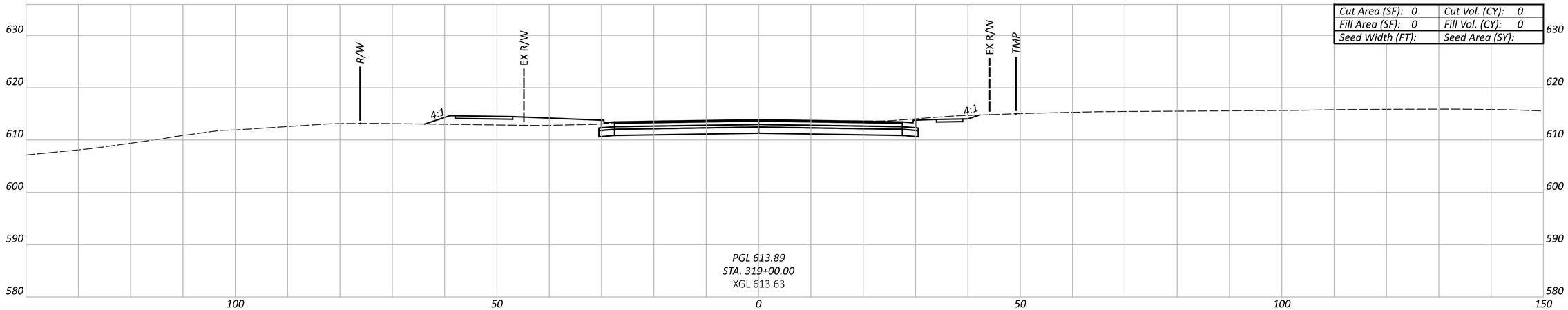

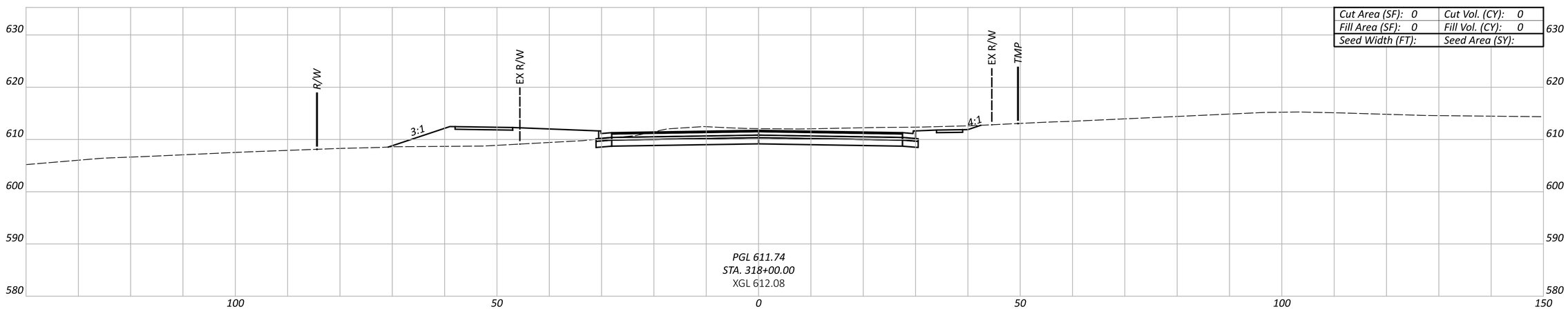

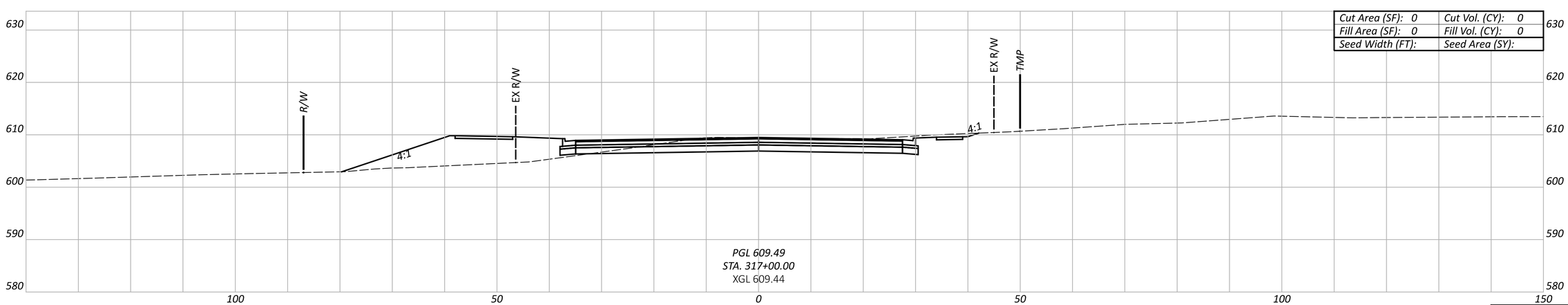

Sheet Totals		
Seeding	Cut	Fill

CROSS SECTIONS - ALTERNATIVE 3
SYMMES RD. - STA. 317+00 TO STA. 319+00

DESIGN AGENCY

HDR

DESIGNER
MJL

REVIEWER
PJD 02/21/25

PROJECT ID
SYMMES RD

SHEET P.54 TOTAL 115

BUT-SYMMES

MODEL: 00000_GX305 PAPERSIZE: 34x22 (in.) DATE: 3/31/2025 TIME: 2:07:18 PM USER: MLORENZ
pw:\\pwhdruseas01:HDR_US_East_01\Documents\Butler_County_Transportation_Improvement_District_-_Ohio\BCTID-SymmesRd_Grd_Separation\6.0_CAD_BIM\6.2_WIP\01_Design\000000\400-Engineering\Roadway\Sheets\Alt 3 Symmes Road Cross Sections

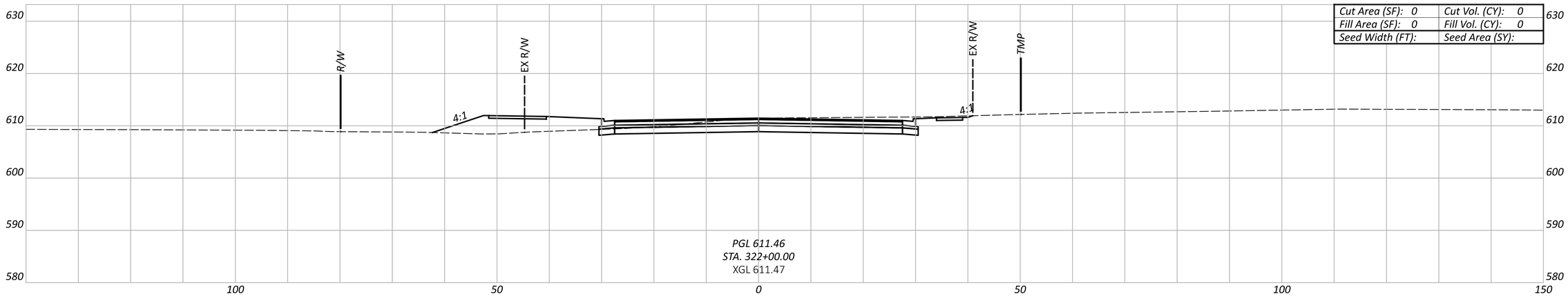

Cut Area (SF): 0	Cut Vol. (CY): 0
Fill Area (SF): 0	Fill Vol. (CY): 0
Seed Width (FT):	Seed Area (SY):

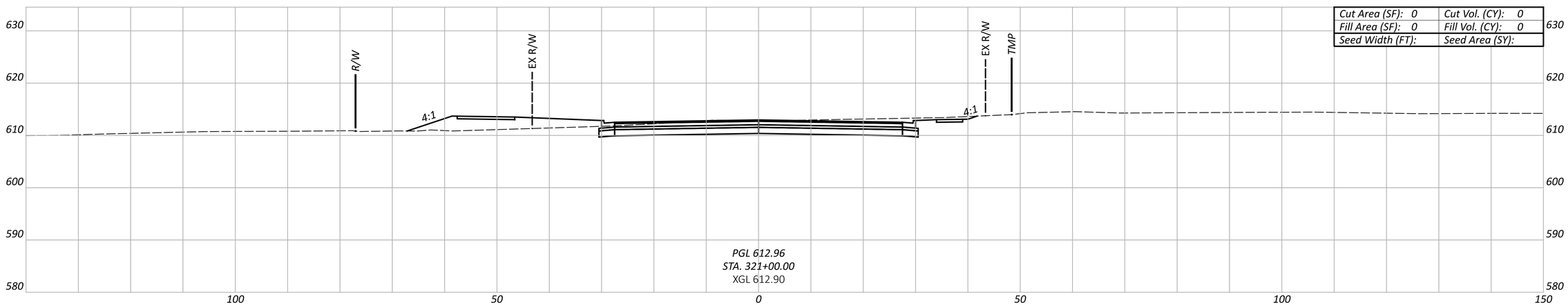

Cut Area (SF): 0	Cut Vol. (CY): 0
Fill Area (SF): 0	Fill Vol. (CY): 0
Seed Width (FT):	Seed Area (SY):

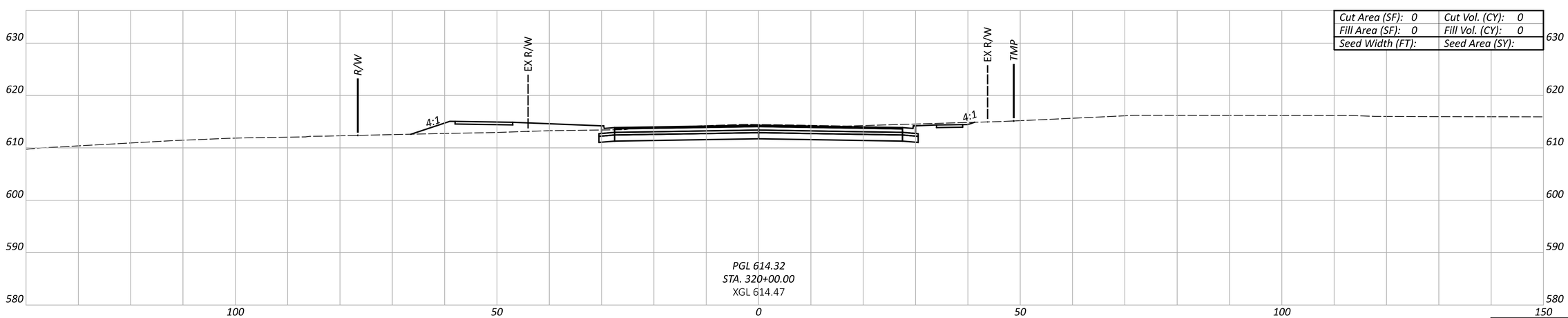

Cut Area (SF): 0	Cut Vol. (CY): 0
Fill Area (SF): 0	Fill Vol. (CY): 0
Seed Width (FT):	Seed Area (SY):

Sheet Totals		
Seeding	Cut	Fill

CROSS SECTIONS - ALTERNATIVE 3
SYMMES RD. - STA. 320+00 TO STA. 322+00

DESIGN AGENCY

HDR

DESIGNER
MJL

REVIEWER
PJD 02/21/25

PROJECT ID
SYMMES RD

SHEET P.55 TOTAL 115

BUT-SYMMES

MODEL: 00000_GX306 PAPERSIZE: 34x22 (in.) DATE: 3/31/2025 TIME: 2:07:21 PM USER: MLORENZ
pw:\\pwhdruseas01:HDR_US_East_01\Documents\Butler_County_Transportation_Improvement_District_-_Ohio\BCTID-SymmesRd_Grd_Separation\6.0_CAD_BIM\6.2_WIP\01_Design\000000\400-Engineering\Roadway\Sheets\Alt 3 Symmes Road Cross Sections

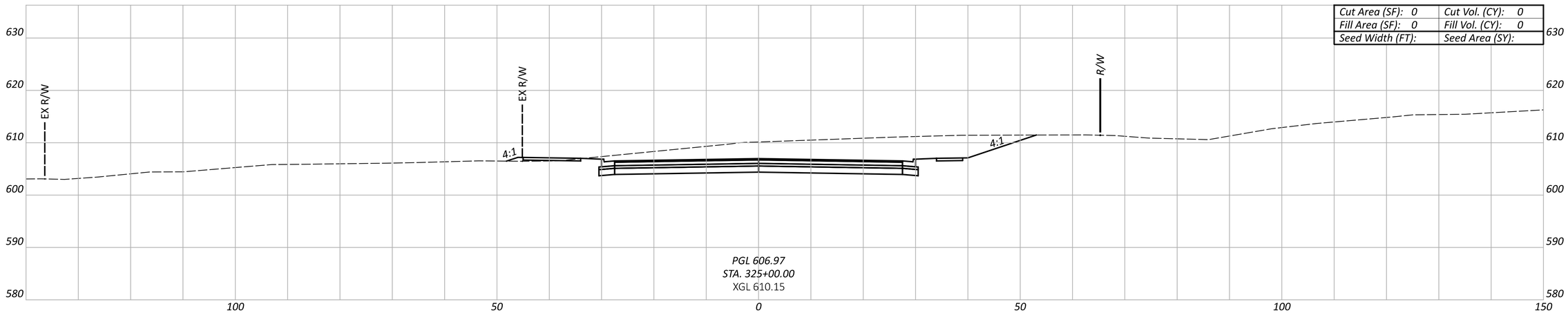

Cut Area (SF): 0	Cut Vol. (CY): 0
Fill Area (SF): 0	Fill Vol. (CY): 0
Seed Width (FT):	Seed Area (SY):

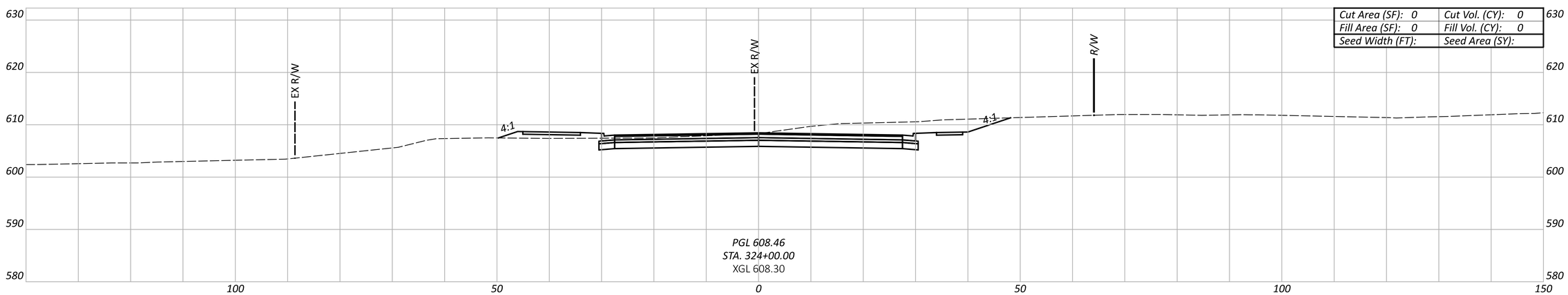

Cut Area (SF): 0	Cut Vol. (CY): 0
Fill Area (SF): 0	Fill Vol. (CY): 0
Seed Width (FT):	Seed Area (SY):

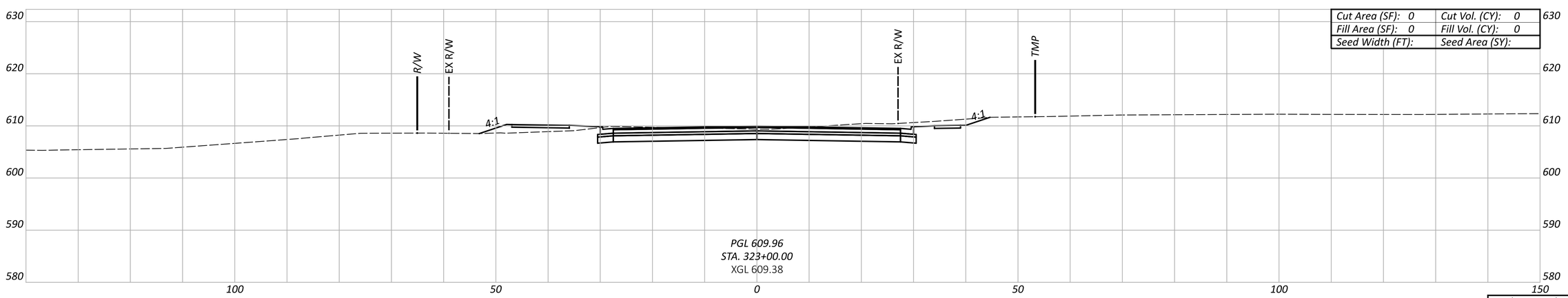

Cut Area (SF): 0	Cut Vol. (CY): 0
Fill Area (SF): 0	Fill Vol. (CY): 0
Seed Width (FT):	Seed Area (SY):

Sheet Totals		
Seeding	Cut	Fill

CROSS SECTIONS - ALTERNATIVE 3
SYMMES RD. - STA. 323+00 TO STA. 325+00

DESIGN AGENCY

HDR

DESIGNER
MJL

REVIEWER
PJD 02/21/25

PROJECT ID
SYMMES RD

SHEET P.56 TOTAL 115

BUT-SYMMES

MODEL: 00000_GX307 PAPERSIZE: 34x22 (in.) DATE: 3/31/2025 TIME: 2:07:26 PM USER: MLORENZ
pw:\\pwhdruseas01:HDR_US_East_01\Documents\Butler_County_Transportation_Improvement_District_-_Ohio\BCTID-SymmesRd_Grd_Separation\6.0_CAD_BIM\6.2_WIP\01_Design\000000\400-Engineering\Roadway\Sheets\Alt 3 Symmes Road Cross Sections

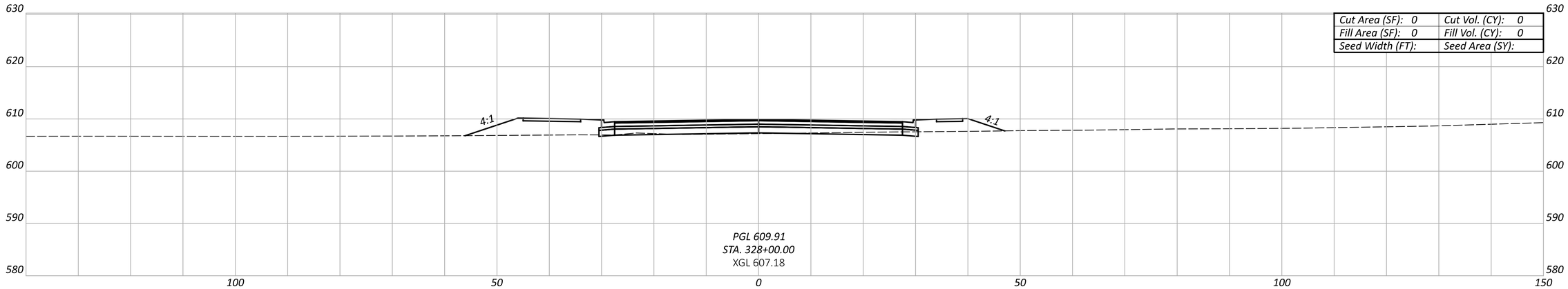

Cut Area (SF): 0	Cut Vol. (CY): 0
Fill Area (SF): 0	Fill Vol. (CY): 0
Seed Width (FT):	Seed Area (SY):

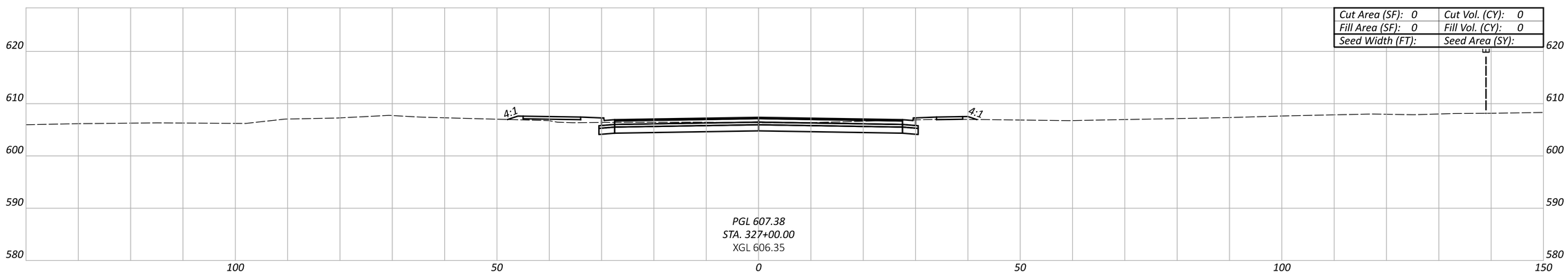

Cut Area (SF): 0	Cut Vol. (CY): 0
Fill Area (SF): 0	Fill Vol. (CY): 0
Seed Width (FT):	Seed Area (SY):

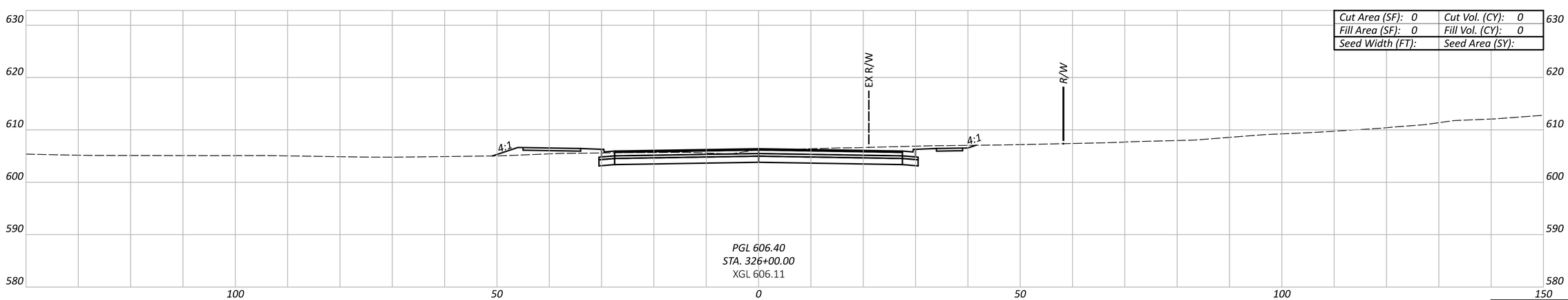

Cut Area (SF): 0	Cut Vol. (CY): 0
Fill Area (SF): 0	Fill Vol. (CY): 0
Seed Width (FT):	Seed Area (SY):

Sheet Totals		
Seeding	Cut	Fill

CROSS SECTIONS - ALTERNATIVE 3
SYMMES RD. - STA. 326+00 TO STA. 328+00

DESIGN AGENCY

HDR

DESIGNER
MJL

REVIEWER
PJD 02/21/25

PROJECT ID
SYMMES RD

SHEET P.57 TOTAL 115

BUT-SYMMES

MODEL: 00000_GX308 PAPERSIZE: 34x22 (in.) DATE: 3/31/2025 TIME: 2:07:31 PM USER: MLORENZ
pw:\\pwhdruseas01:HDR_US_East_01\Documents\Butler_County_Transportation_Improvement_District_-_Ohio\BCTID-SymmesRd_Grd_Separation\6.0_CAD_BIM\6.2_WIP\01_Design\000000\400-Engineering\Roadway\Sheets\Alt 3 Symmes Road Cross Sections

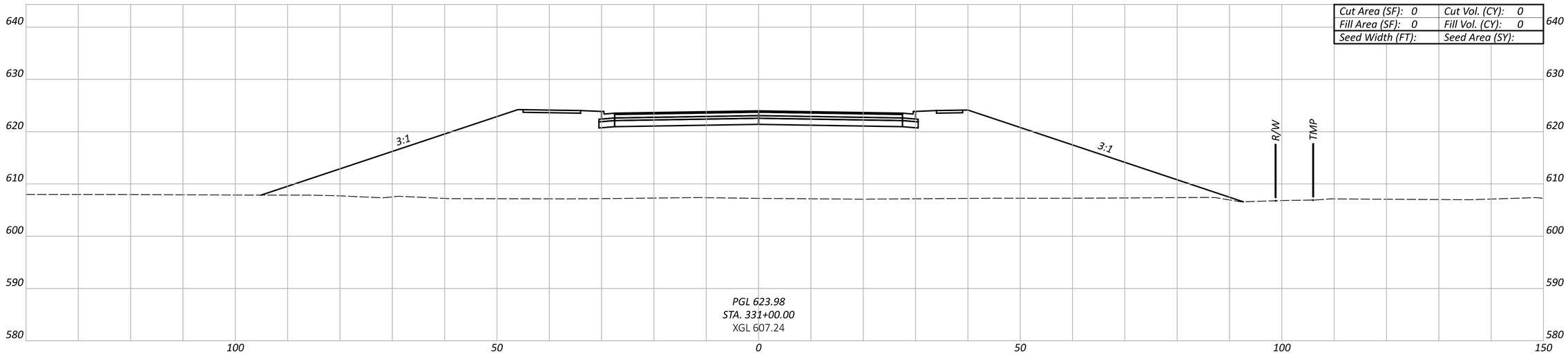

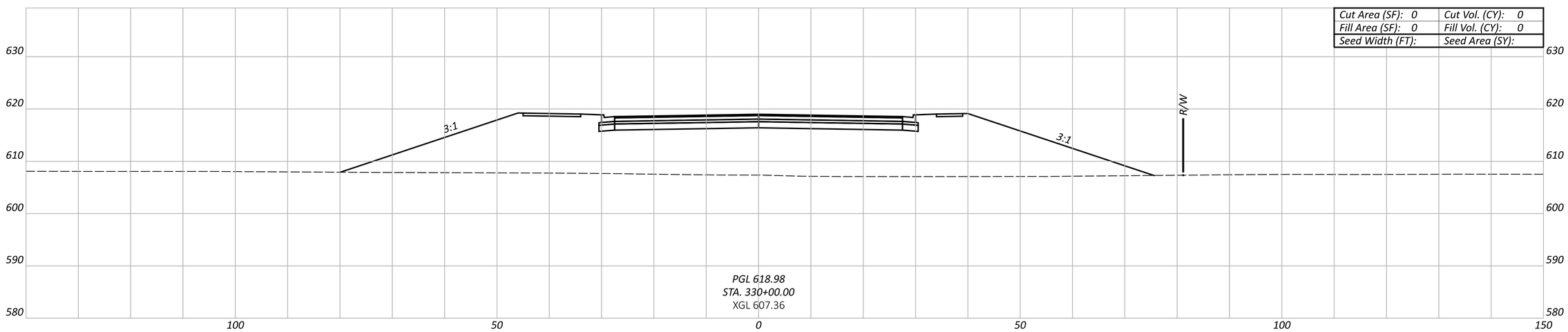

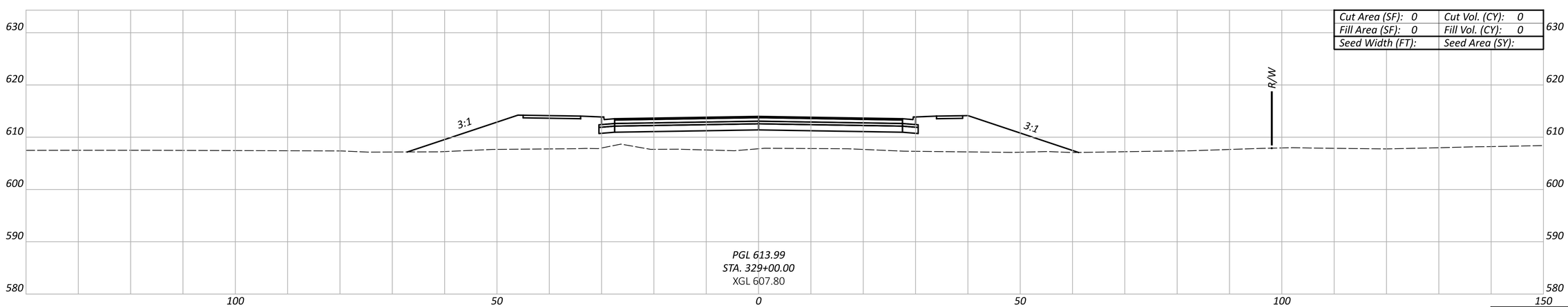

Sheet Totals		
Seeding	Cut	Fill

CROSS SECTIONS - ALTERNATIVE 3
SYMMES RD. - STA. 329+00 TO STA. 331+00

DESIGN AGENCY

HDR

DESIGNER
MJL

REVIEWER
PJD 02/21/25

PROJECT ID
SYMMES RD

SHEET P.58 TOTAL 115

BUT-SYMMES

MODEL: 00000_GX309 PAPERSIZE: 34x22 (in.) DATE: 3/31/2025 TIME: 2:07:35 PM USER: MLORENZ
pw:\\pwhdruseas01:HDR_US_East_01\Documents\Butler_County_Transportation_Improvement_District_-_Ohio\BCTID-SymmesRd_Grd_Separation\6.0_CAD_BIM\6.2_WIP\01_Design\000000\400-Engineering\Roadway\Sheets\Alt 3 Symmes Road Cross Sections

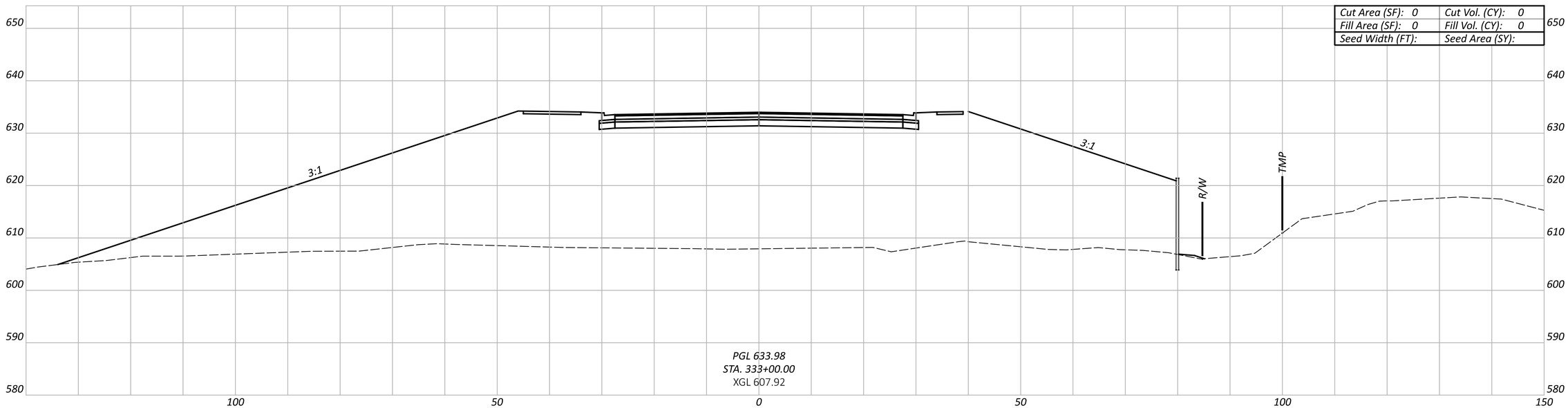

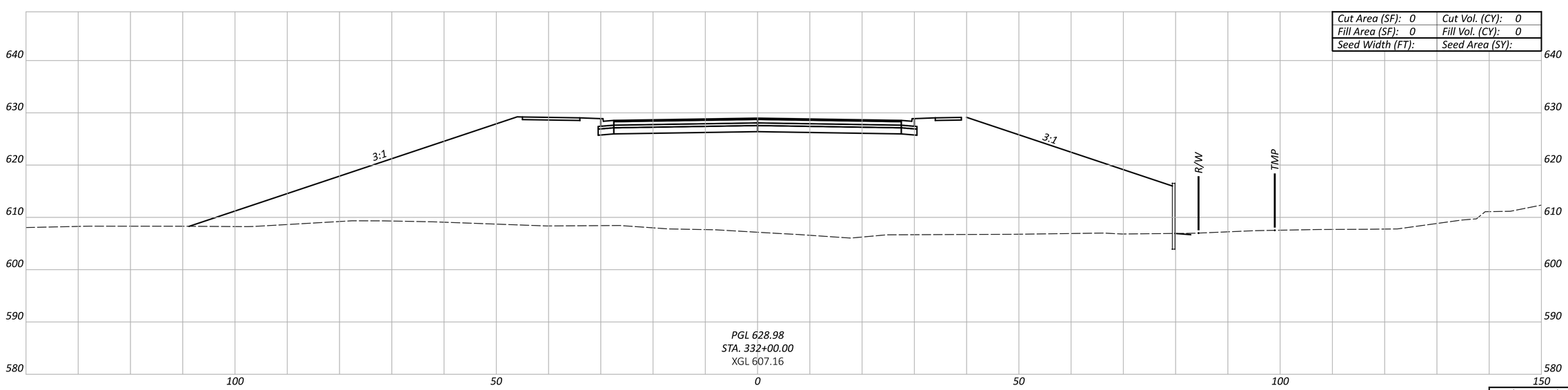

Sheet Totals		
Seeding	Cut	Fill

CROSS SECTIONS - ALTERNATIVE 3
SYMMES RD. - STA. 332+00 TO STA. 333+00

DESIGN AGENCY

HDR

DESIGNER
MJL

REVIEWER
PJD 02/21/25

PROJECT ID
SYMMES RD

SHEET P.59 TOTAL 115

BUT-SYMMES

MODEL: 00000_GX310 PAPERSIZE: 34x22 (in.) DATE: 3/31/2025 TIME: 2:07:39 PM USER: MLORENZ
pw:\\pwhdruseas01:HDR_US_East_01\Documents\Butler_County_Transportation_Improvement_District_-_Ohio\BCTID-SymmesRd_Grd_Separation\6.0_CAD_BIM\6.2_WIP\01_Design\000000\400-Engineering\Roadway\Sheets\Alt 3 Symmes Road Cross Sections

Cut Area (SF): 0	Cut Vol. (CY): 0
Fill Area (SF): 0	Fill Vol. (CY): 0
Seed Width (FT):	Seed Area (SY):

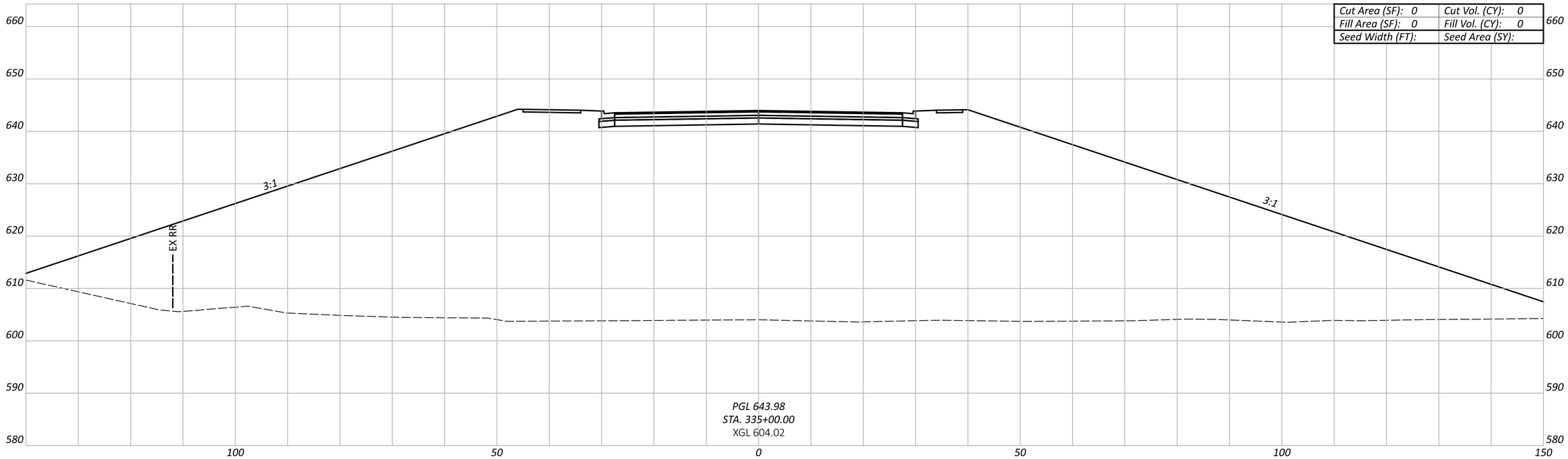

Cut Area (SF): 0	Cut Vol. (CY): 0
Fill Area (SF): 0	Fill Vol. (CY): 0
Seed Width (FT):	Seed Area (SY):

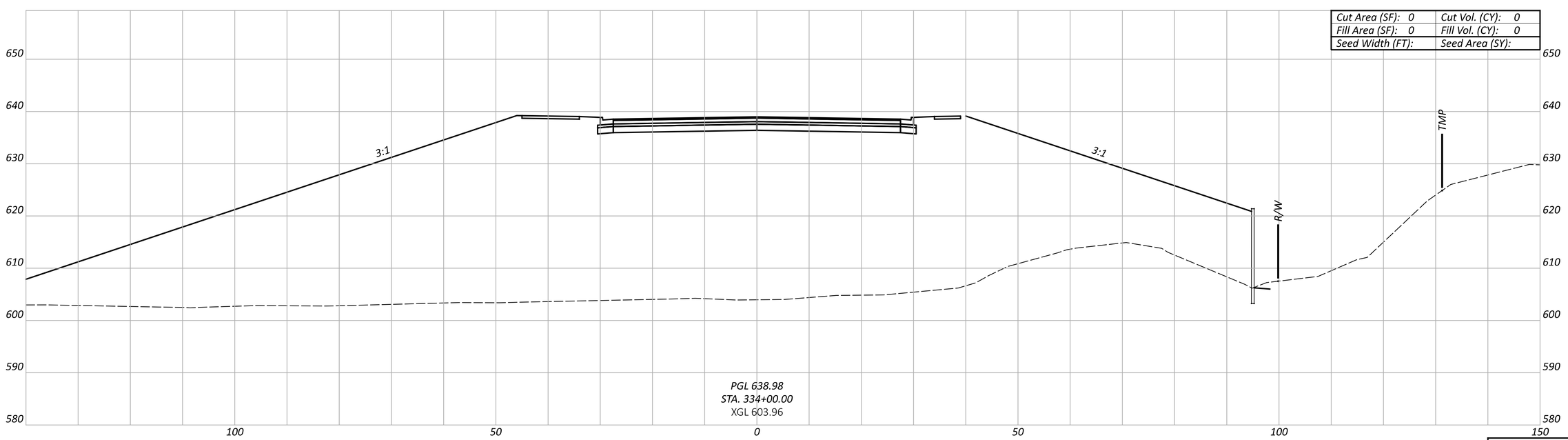

Sheet Totals		
Seeding	Cut	Fill

CROSS SECTIONS - ALTERNATIVE 3
SYMMES RD. - STA. 334+00 TO STA. 335+00

DESIGN AGENCY

HDR

DESIGNER
MJL

REVIEWER
PJD 02/21/25

PROJECT ID
SYMMES RD

SHEET P.60 TOTAL 115

BUT-SYMMES

MODEL: 00000_GX311 PAPERSIZE: 34x22 (in.) DATE: 3/31/2025 TIME: 2:07:42 PM USER: MLORENZ
pw:\\pwhdruseas01:HDR_US_East_01\Documents\Butler_County_Transportation_Improvement_District_-_Ohio\BCTID-SymmesRd_Grd_Separation\6.0_CAD_BIM\6.2_WIP\01_Design\000000\400-Engineering\Roadway\Sheets\Alt 3 Symmes Road Cross Sections

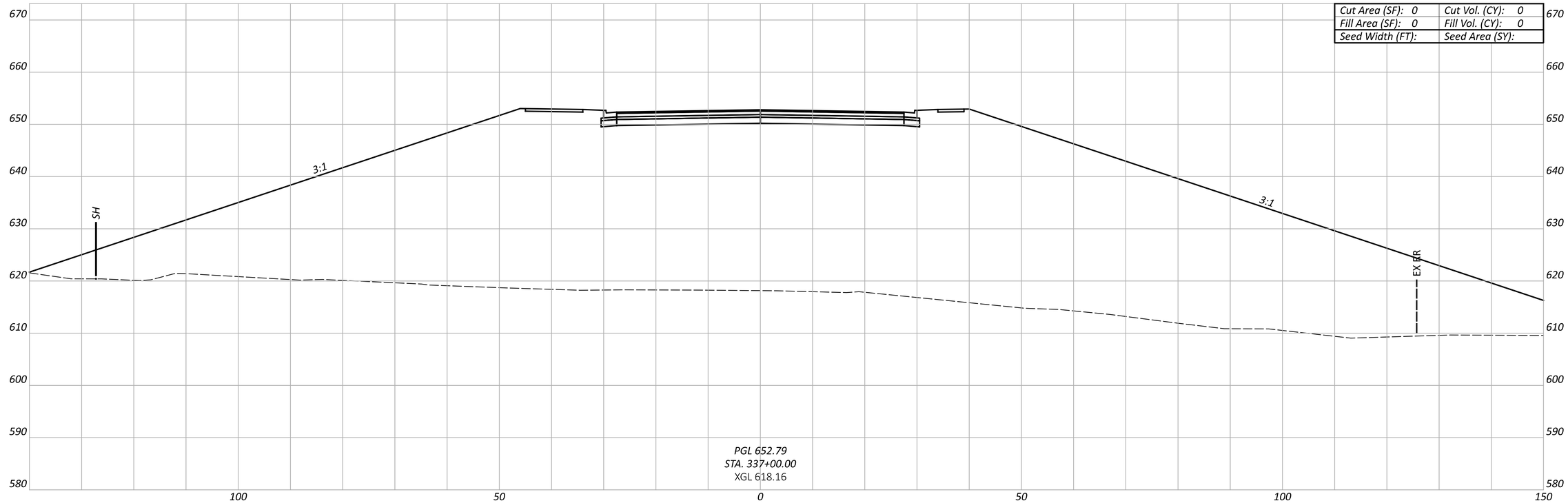

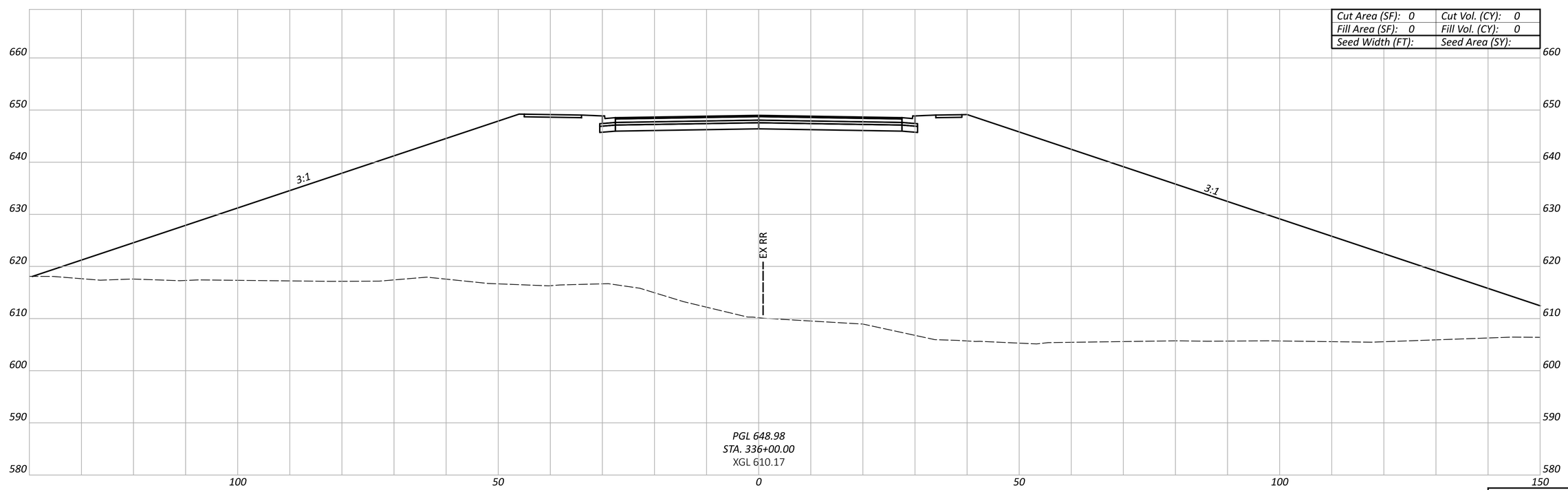

Sheet Totals		
Seeding	Cut	Fill

CROSS SECTIONS - ALTERNATIVE 3
SYMMES RD. - STA. 336+00 TO STA. 337+00

DESIGN AGENCY

HDR

DESIGNER
MJL

REVIEWER
PJD 02/21/25

PROJECT ID
SYMMES RD

SHEET P.61 TOTAL 115

BUT-SYMMES

MODEL: 00000_GX312 PAPERSIZE: 34x22 (in.) DATE: 3/31/2025 TIME: 2:07:45 PM USER: MLORENZ
pw:\\pwhdruseas01:HDR_US_East_01\Documents\Butler_County_Transportation_Improvement_District_-_Ohio\BCTID-SymmesRd_Grd_Separation\6.0_CAD_BIM\6.2_WIP\01_Design\000000\400-Engineering\Roadway\Sheets\Alt 3 Symmes Road Cross Sections

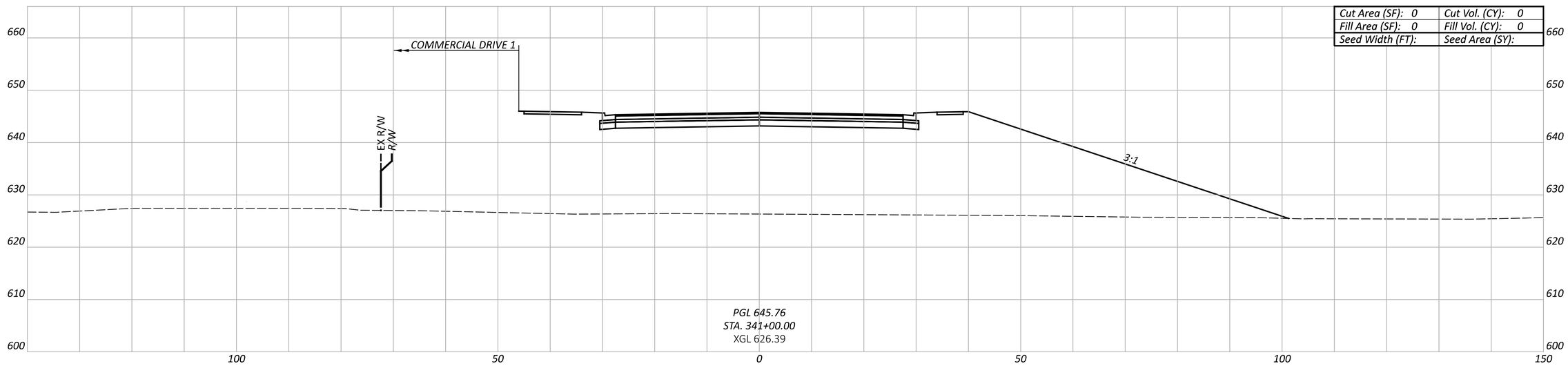

Cut Area (SF): 0	Cut Vol. (CY): 0
Fill Area (SF): 0	Fill Vol. (CY): 0
Seed Width (FT):	Seed Area (SY):

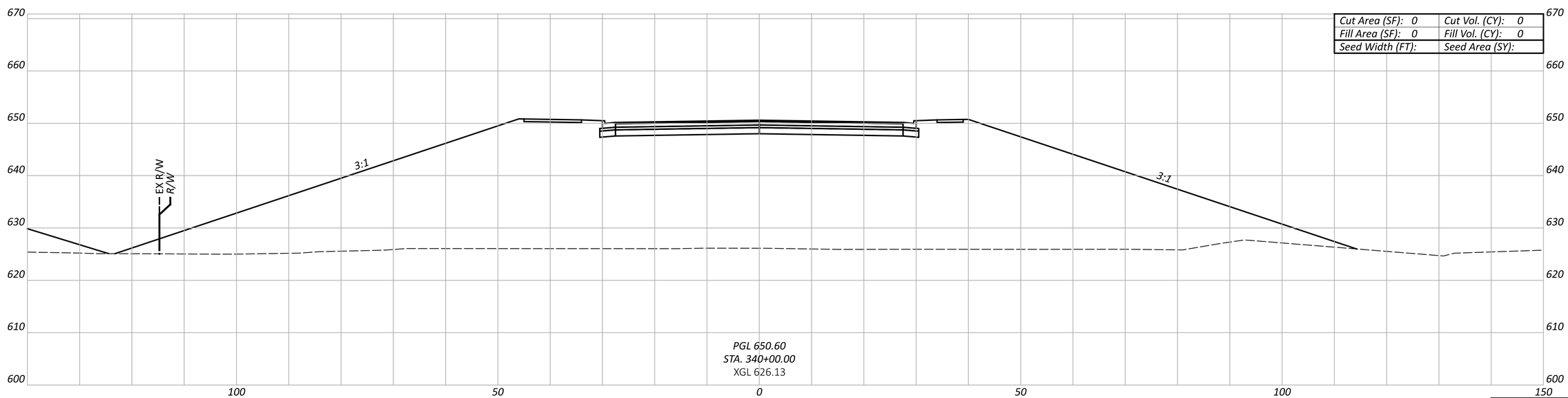

Cut Area (SF): 0	Cut Vol. (CY): 0
Fill Area (SF): 0	Fill Vol. (CY): 0
Seed Width (FT):	Seed Area (SY):

Sheet Totals		
Seeding	Cut	Fill

CROSS SECTIONS - ALTERNATIVE 3
SYMMES RD. - STA. 340+00 TO STA. 341+00

DESIGN AGENCY

HDR

DESIGNER
MJL

REVIEWER
PJD 02/21/25

PROJECT ID
SYMMES RD

SHEET P.62 TOTAL 115

BUT-SYMMES

MODEL: 00000_GX313 PAPERSIZE: 34x22 (in.) DATE: 3/31/2025 TIME: 2:07:47 PM USER: MLORENZ
pw:\\pwhdruseas01:HDR_US_East_01\Documents\Butler_County_Transportation_Improvement_District_-_Ohio\BCTID-SymmesRd_Grd_Separation\6.0_CAD_BIM\6.2_WIP\01_Design\000000\400-Engineering\Roadway\Sheets\Alt 3 Symmes Road Cross Sections

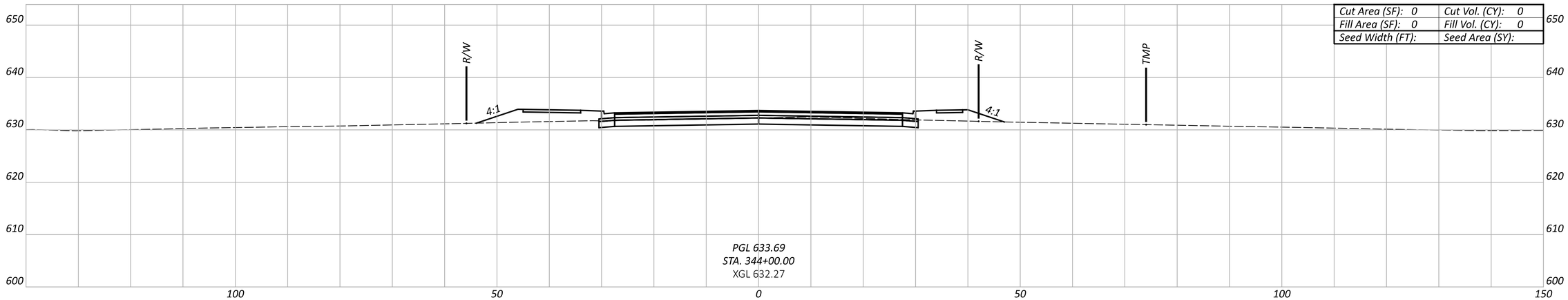

Cut Area (SF): 0	Cut Vol. (CY): 0
Fill Area (SF): 0	Fill Vol. (CY): 0
Seed Width (FT):	Seed Area (SY):

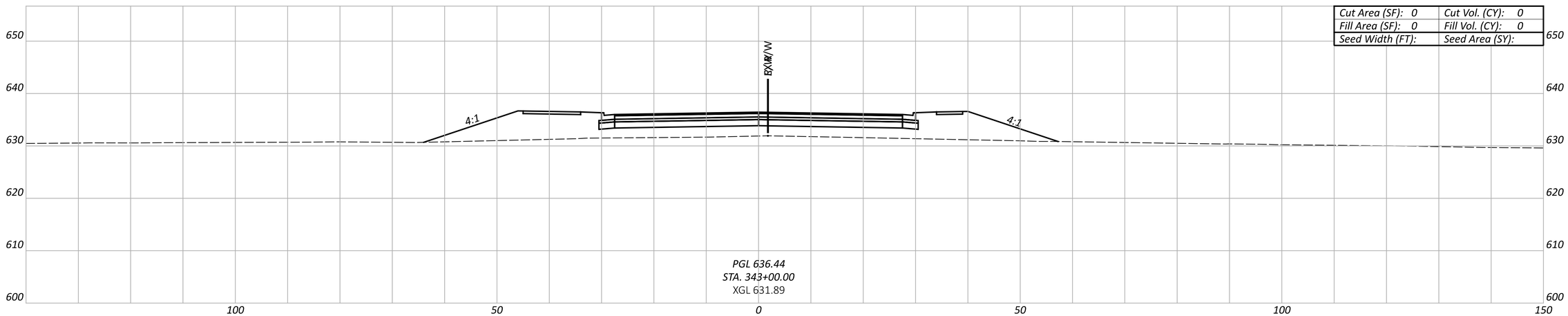

Cut Area (SF): 0	Cut Vol. (CY): 0
Fill Area (SF): 0	Fill Vol. (CY): 0
Seed Width (FT):	Seed Area (SY):

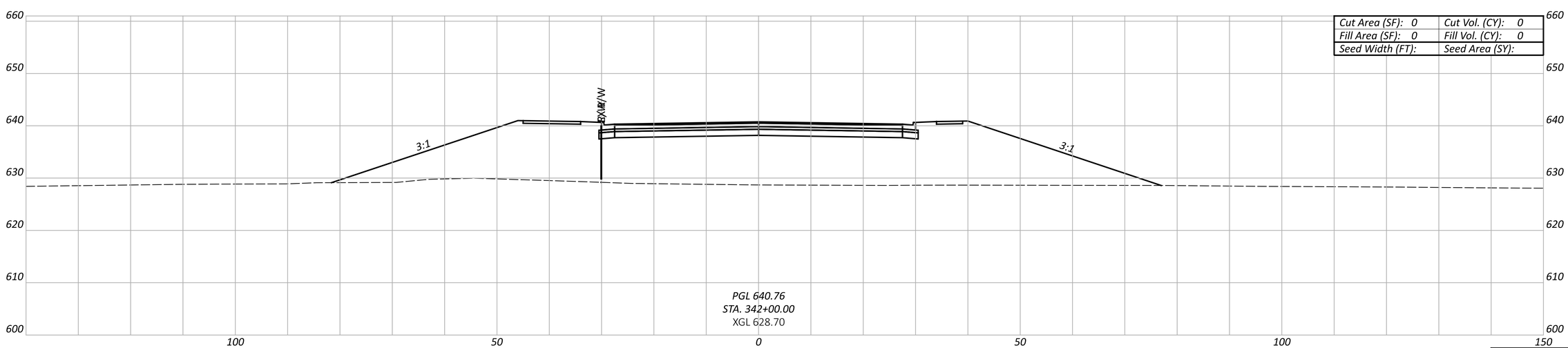

Cut Area (SF): 0	Cut Vol. (CY): 0
Fill Area (SF): 0	Fill Vol. (CY): 0
Seed Width (FT):	Seed Area (SY):

Sheet Totals		
Seeding	Cut	Fill

CROSS SECTIONS - ALTERNATIVE 3
SYMMES RD. - STA. 342+00 TO STA. 344+00

DESIGN AGENCY

HDR

DESIGNER
MJL

REVIEWER
PJD 02/21/25

PROJECT ID
SYMMES RD

SHEET P.63 TOTAL 115

BUT-SYMMES

MODEL: 00000_GX314 PAPERSIZE: 34x22 (in.) DATE: 3/31/2025 TIME: 2:07:50 PM USER: MLORENZ
pw:\\pwhdruseas01:HDR_US_East_01\Documents\Butler_County_Transportation_Improvement_District_-_Ohio\BCTID-SymmesRd_Grd_Separation\6.0_CAD_BIM\6.2_WIP\01_Design\000000\400-Engineering\Roadway\Sheets\Alt 3 Symmes Road Cross Sections

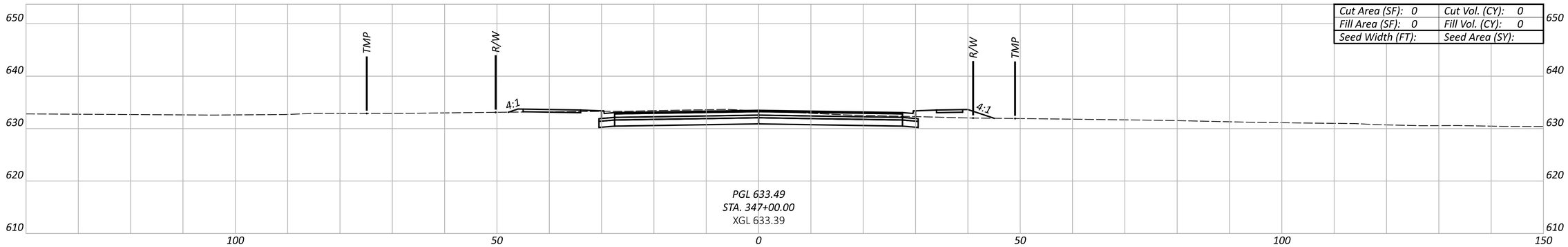

Cut Area (SF): 0	Cut Vol. (CY): 0
Fill Area (SF): 0	Fill Vol. (CY): 0
Seed Width (FT):	Seed Area (SY):

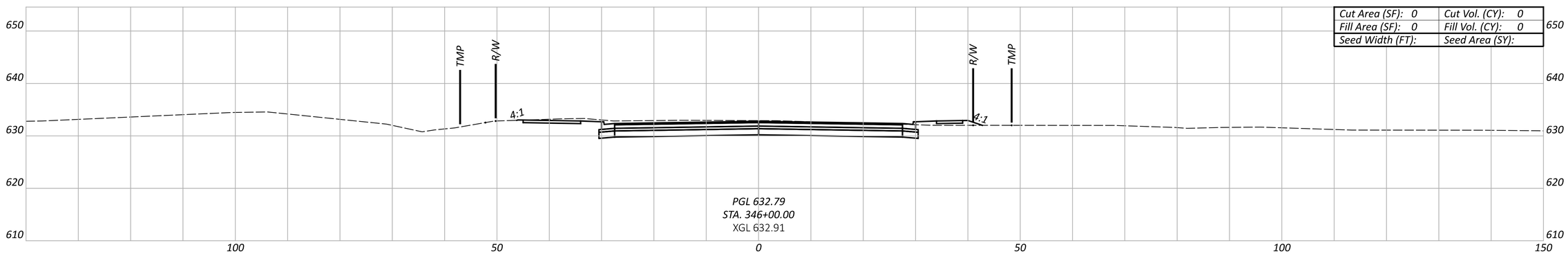

Cut Area (SF): 0	Cut Vol. (CY): 0
Fill Area (SF): 0	Fill Vol. (CY): 0
Seed Width (FT):	Seed Area (SY):

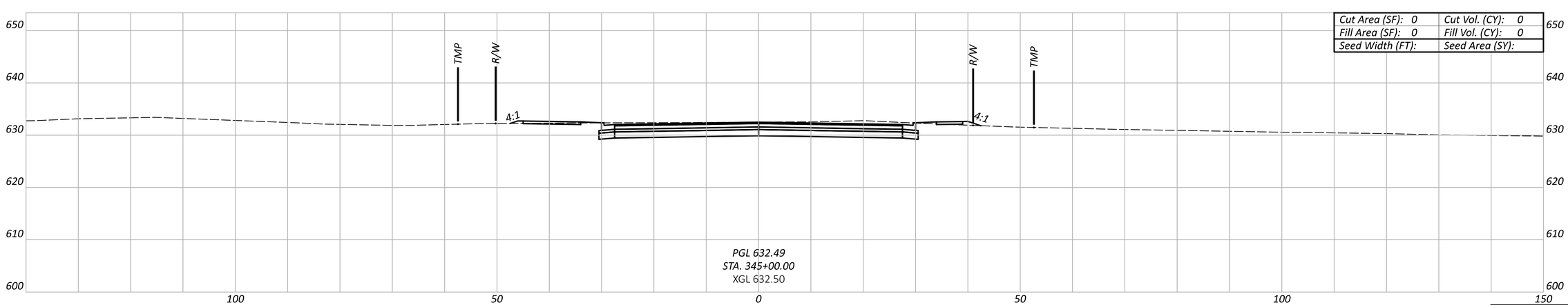

Cut Area (SF): 0	Cut Vol. (CY): 0
Fill Area (SF): 0	Fill Vol. (CY): 0
Seed Width (FT):	Seed Area (SY):

Sheet Totals		
Seeding	Cut	Fill

CROSS SECTIONS - ALTERNATIVE 3
SYMMES RD. - STA. 345+00 TO STA. 347+00

DESIGN AGENCY

HDR

DESIGNER
MJL

REVIEWER
PJD 02/21/25

PROJECT ID
SYMMES RD

SHEET P.64 TOTAL 115

BUT-SYMMES

MODEL: 00000_GX315 PAPERSIZE: 34x22 (in.) DATE: 3/31/2025 TIME: 2:07:53 PM USER: MLORENZ
pw:\\pwhdruseas01:HDR_US_East_01\Documents\Butler_County_Transportation_Improvement_District_-_Ohio\BCTID-SymmesRd_Grd_Separation\6.0_CAD_BIM\6.2_WIP\01_Design\000000\400-Engineering\Roadway\Sheets\Alt 3 Symmes Road Cross Sections

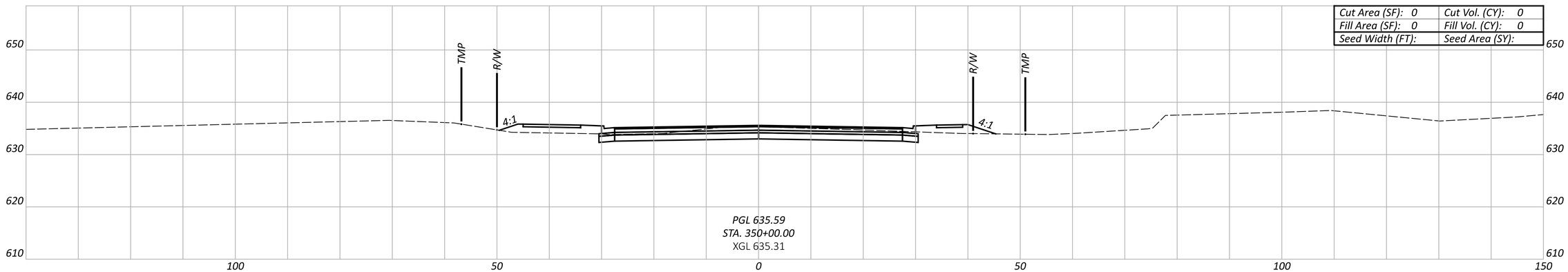

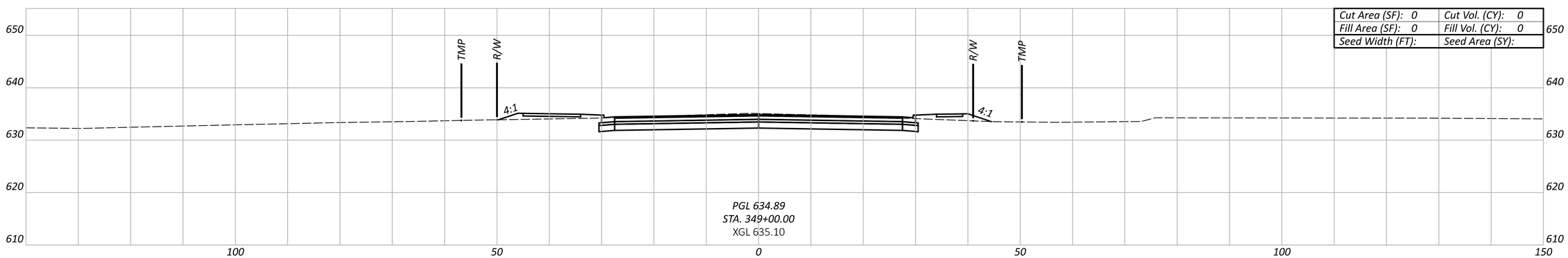

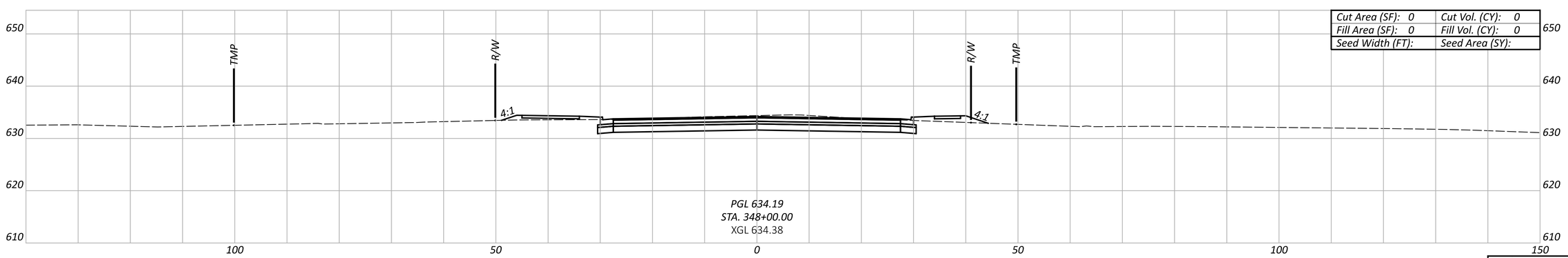

Sheet Totals		
Seeding	Cut	Fill

CROSS SECTIONS - ALTERNATIVE 3
SYMMES RD. - STA. 348+00 TO STA. 350+00

DESIGN AGENCY

HDR

DESIGNER
MJL

REVIEWER
PJD 02/21/25

PROJECT ID
SYMMES RD

SHEET P.65 TOTAL 115

BUT-SYMMES

MODEL: 00000_GX316 PAPERSIZE: 34x22 (in.) DATE: 3/31/2025 TIME: 2:07:57 PM USER: MLORENZ
pw:\\pwhdruseas01:HDR_US_East_01\Documents\Butler_County_Transportation_Improvement_District_-_Ohio\BCTID-SymmesRd_Grd_Separation\6.0_CAD_BIM\6.2_WIP\01_Design\000000\400-Engineering\Roadway\Sheets\Alt 3 Symmes Road Cross Sections

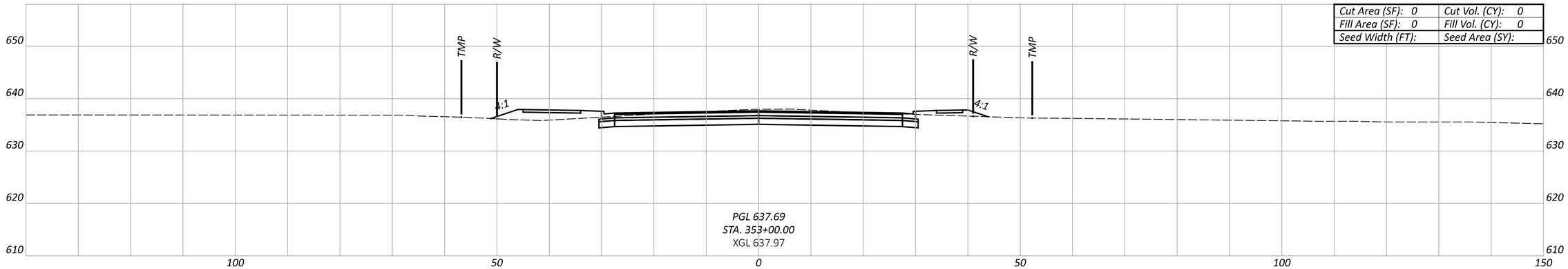

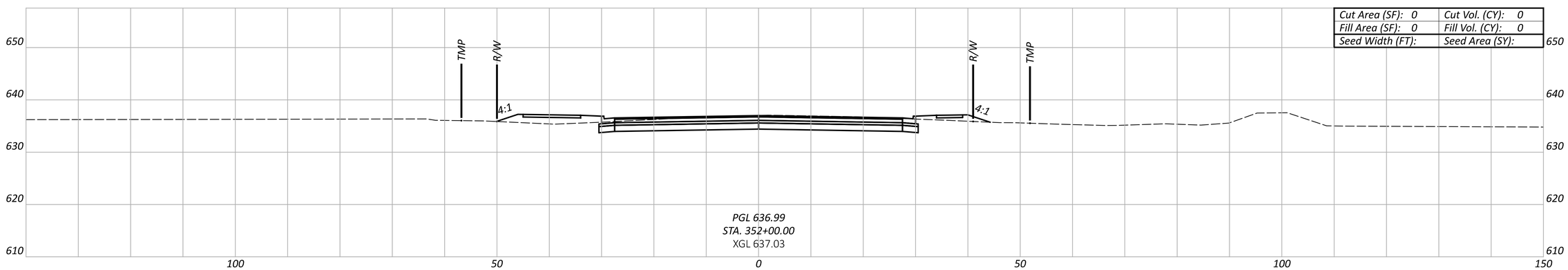

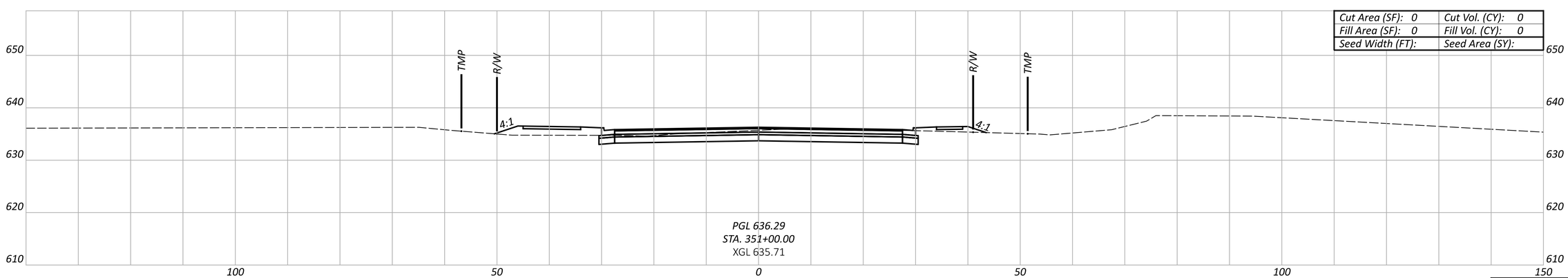

Sheet Totals		
Seeding	Cut	Fill

CROSS SECTIONS - ALTERNATIVE 3
SYMMES RD. - STA. 351+00 TO STA. 353+00

DESIGN AGENCY

HDR

DESIGNER
MJL

REVIEWER
PJD 02/21/25

PROJECT ID
SYMMES RD

SHEET P.66 TOTAL 115

BUT-SYMMES

MODEL: 00000_GX317 PAPERSIZE: 34x22 (in.) DATE: 3/31/2025 TIME: 2:08:01 PM USER: MLORENZ
pw:\\pwhdruseas01:HDR_US_East_01\Documents\Butler_County_Transportation_Improvement_District_-_Ohio\BCTID-SymmesRd_Grd_Separation\6.0_CAD_BIM\6.2_WIP\01_Design\000000\400-Engineering\Roadway\Sheets\Alt 3 Symmes Road Cross Sections

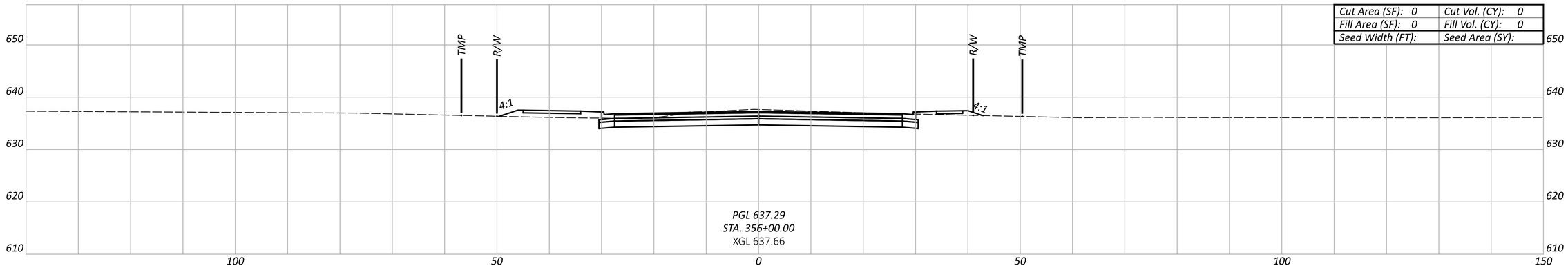

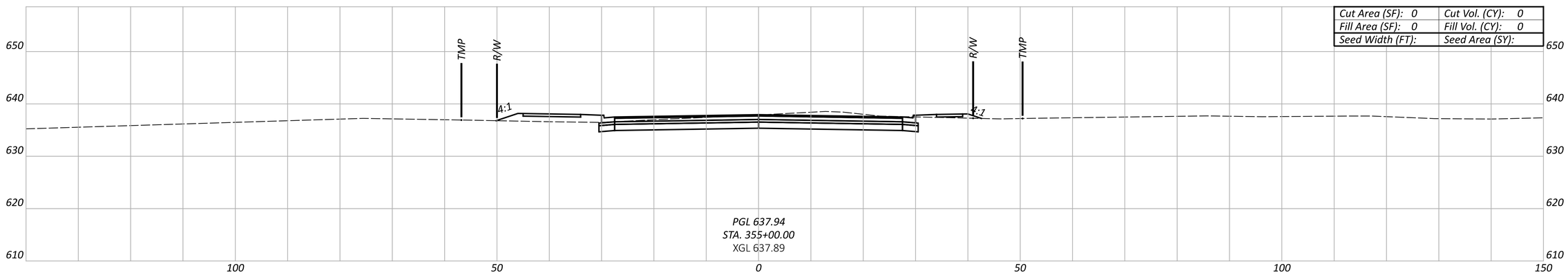

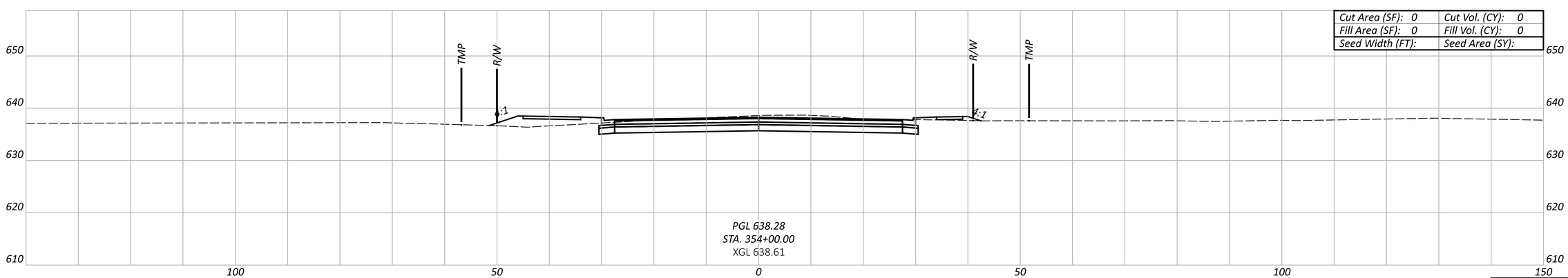

Sheet Totals		
Seeding	Cut	Fill

CROSS SECTIONS - ALTERNATIVE 3
SYMMES RD. - STA. 354+00 TO STA. 356+00

DESIGN AGENCY

HDR

DESIGNER
MJL

REVIEWER
PJD 02/21/25

PROJECT ID
SYMMES RD

SHEET P.67 TOTAL 115

BUT-SYMMES

MODEL: 00000_GX318 PAPERSIZE: 34x22 (in.) DATE: 3/31/2025 TIME: 2:08:05 PM USER: MLORENZ
pw:\\pwhdruseas01:HDR_US_East_01\Documents\Butler_County_Transportation_Improvement_District_-_Ohio\BCTID-SymmesRd_Grd_Separation\6.0_CAD_BIM\6.2_WIP\01_Design\000000\400-Engineering\Roadway\Sheets\Alt 3 Symmes Road Cross Sections

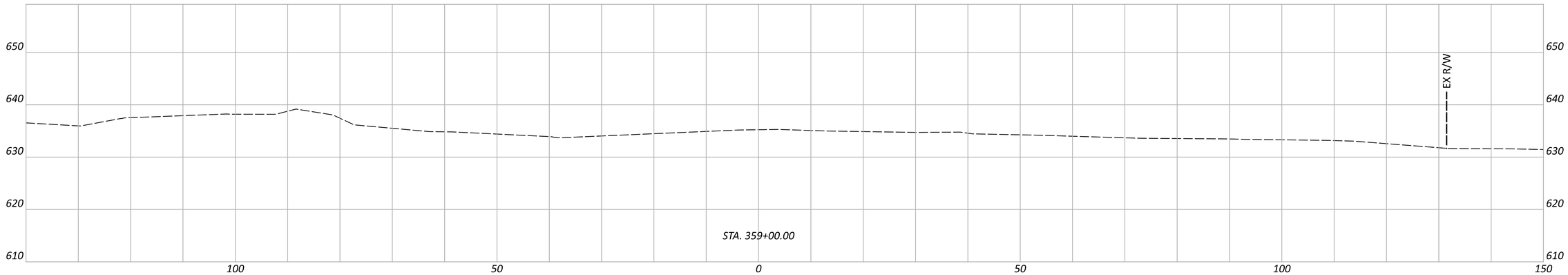

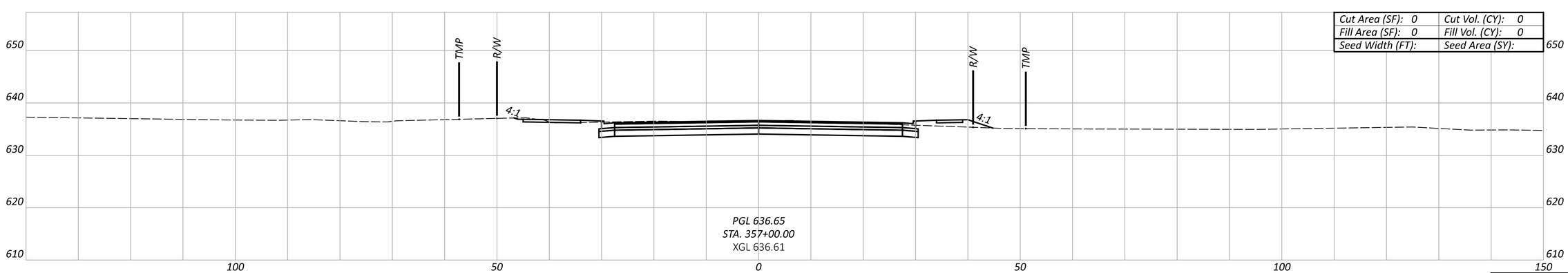

Sheet Totals		
Seeding	Cut	Fill

CROSS SECTIONS - ALTERNATIVE 3
SYMMES RD. - STA. 357+00 TO STA. 359+00

DESIGN AGENCY

HDR

DESIGNER
MJL

REVIEWER
PJD 02/21/25

PROJECT ID
SYMMES RD

SHEET P.68 TOTAL 115

BUT-SYMMES

MODEL: 00000_GX319 PAPERSIZE: 34x22 (in.) DATE: 3/31/2025 TIME: 2:08:09 PM USER: MLORENZ
pw:\\pwhdruseas01:HDR_US_East_01\Documents\Butler_County_Transportation_Improvement_District_-_Ohio\BCTID-SymmesRd_Grd_Separation\6.0_CAD_BIM\6.2_WIP\01_Design\000000\400-Engineering\Roadway\Sheets\Alt 3 Symmes Road Cross Sections

BUT-SYMMES

MODEL: 00000_GX320 PAPERSIZE: 34x22 (in.) DATE: 3/31/2025 TIME: 2:08:12 PM USER: MLORENZ
pw:\\pwhdruseas01:HDR_US_East_01\Documents\Butler_County_Transportation_Improvement_District_-_Ohio\BCTID-SymmesRd_Grd_Separation\6.0_CAD_BIM\6.2_WIP\01_Design\000000\400-Engineering\Roadway\Sheets\Alt 3 Symmes Road Cross Sections

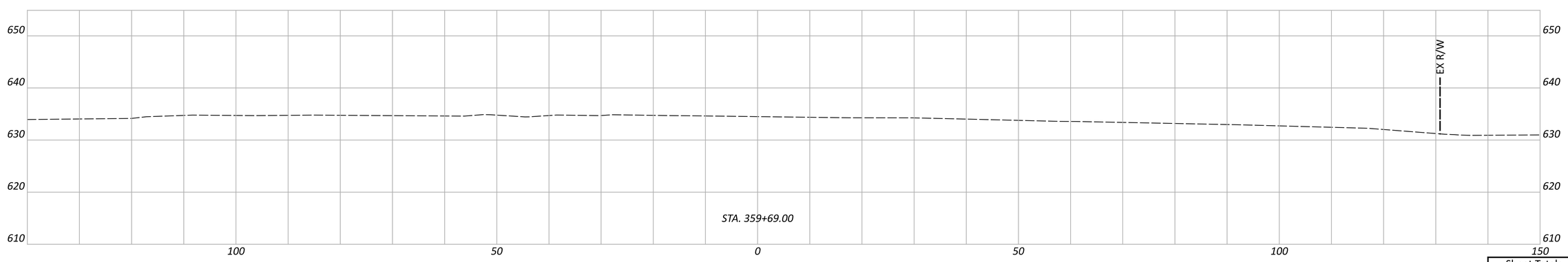

Sheet Totals		
Seeding	Cut	Fill

CROSS SECTIONS - ALTERNATIVE 3
SYMMES RD. - STA. 359+69

DESIGN AGENCY

DESIGNER
MJL

REVIEWER
PJD 02/21/25

PROJECT ID
SYMMES RD

SHEET P.69 TOTAL 115

Cut Area (SF): 0	Cut Vol. (CY): 0
Fill Area (SF): 0	Fill Vol. (CY): 0
Seed Width (FT):	Seed Area (SY):

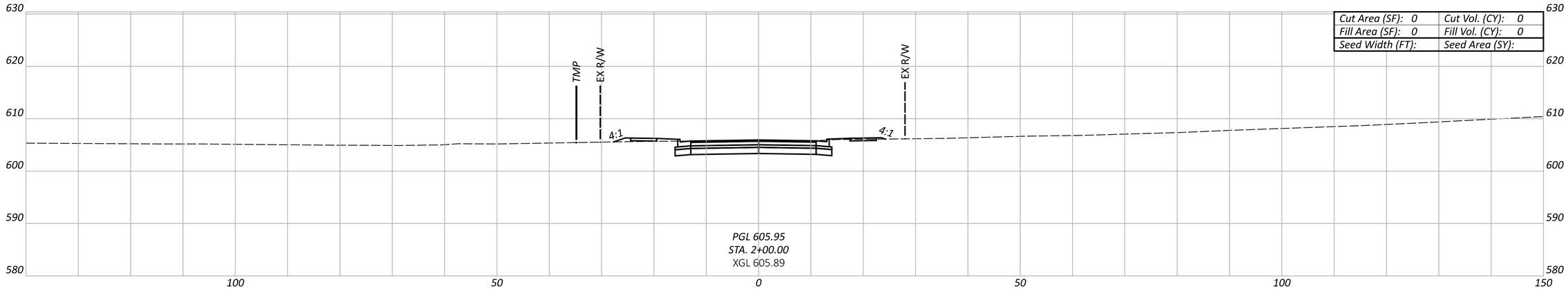

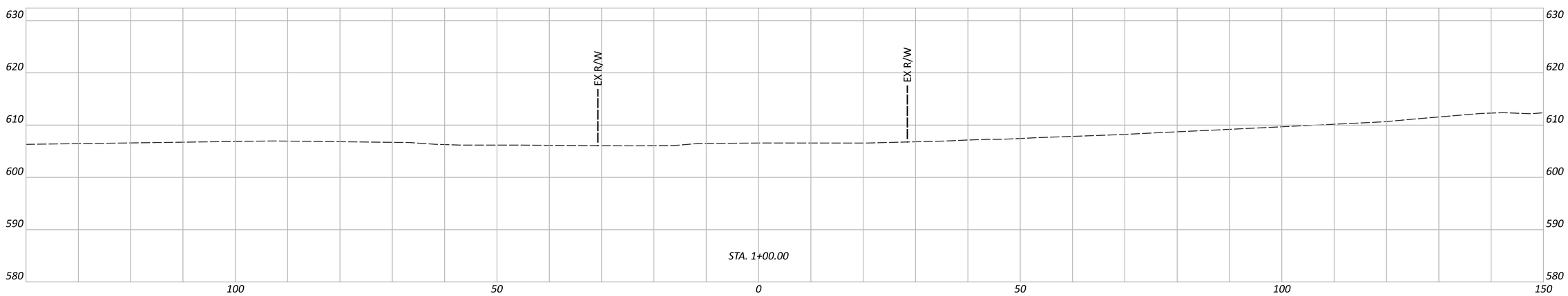

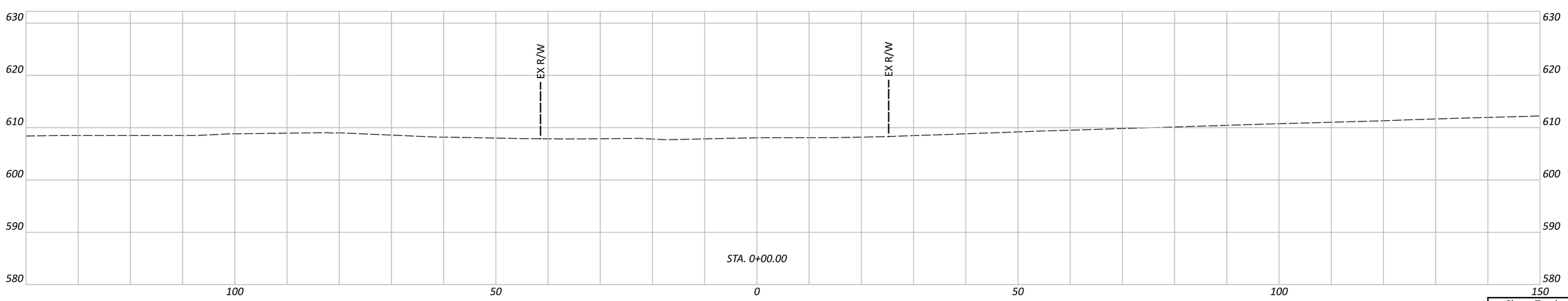

Sheet Totals		
Seeding	Cut	Fill

CROSS SECTIONS - ALTERNATIVE 3
HICKS AVE. - STA. 0+00 TO STA. 2+00

DESIGN AGENCY

HDR

DESIGNER
MJL

REVIEWER
PJD 02/21/25

PROJECT ID
SYMMES RD

SHEET P.70 TOTAL 115

BUT-SYMMES

MODEL: 00000_GX321 PAPERSIZE: 34x22 (in.) DATE: 3/31/2025 TIME: 2:08:13 PM USER: MLORENZ
pw:\\pwhdruseas01:HDR_US_East_01\Documents\Butler_County_Transportation_Improvement_District_-_Ohio\BCTID-SymmesRd_Grd_Separation\6.0_CAD_BIM\6.2_WIP\01_Design\000000\400-Engineering\Roadway\Sheets\Alt 3 Symmes Road Cross Sections

BUT-SYMMES

MODEL: 00000_GX322 PAPERSIZE: 34x22 (in.) DATE: 3/31/2025 TIME: 2:08:16 PM USER: MLORENZ
pw:\\pwhdruseas01:HDR_US_East_01\Documents\Butler_County_Transportation_Improvement_District_-_Ohio\BCTID-SymmesRd_Grd_Separation\6.0_CAD_BIM\6.2_WIP\01_Design\000000\400-Engineering\Roadway\Sheets\Alt 3 Symmes Road Cross Sections

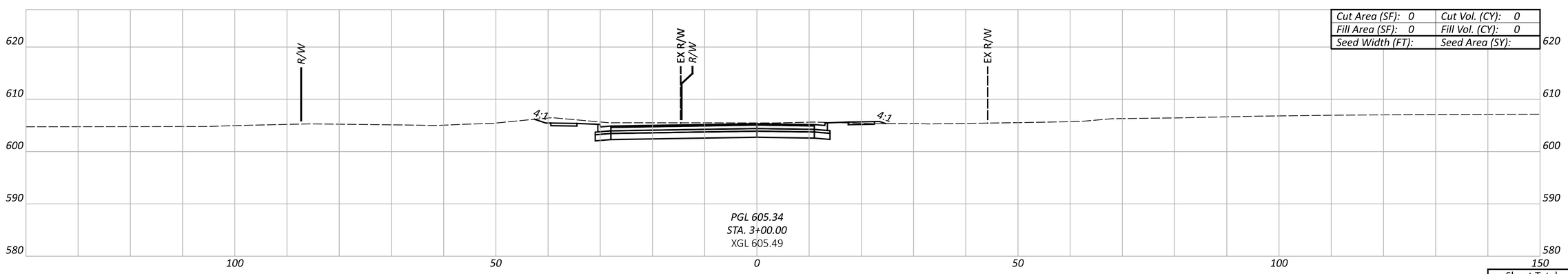

Cut Area (SF): 0	Cut Vol. (CY): 0
Fill Area (SF): 0	Fill Vol. (CY): 0
Seed Width (FT):	Seed Area (SY):

Sheet Totals		
Seeding	Cut	Fill

CROSS SECTIONS - ALTERNATIVE 3
HICKS AVE. - STA. 3+00

DESIGN AGENCY

HDR

DESIGNER
MJL

REVIEWER
PJD 02/21/25

PROJECT ID
SYMMES RD

SHEET P.71 TOTAL 115

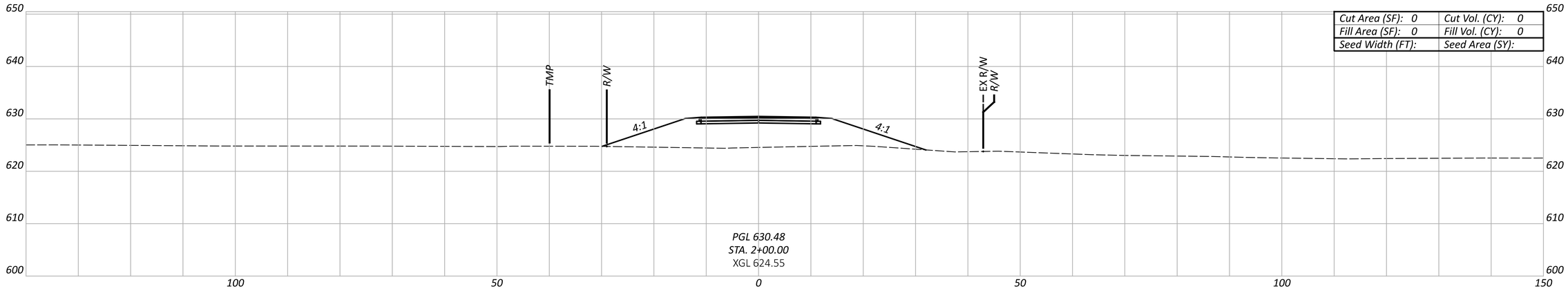

Cut Area (SF): 0	Cut Vol. (CY): 0
Fill Area (SF): 0	Fill Vol. (CY): 0
Seed Width (FT):	Seed Area (SY):

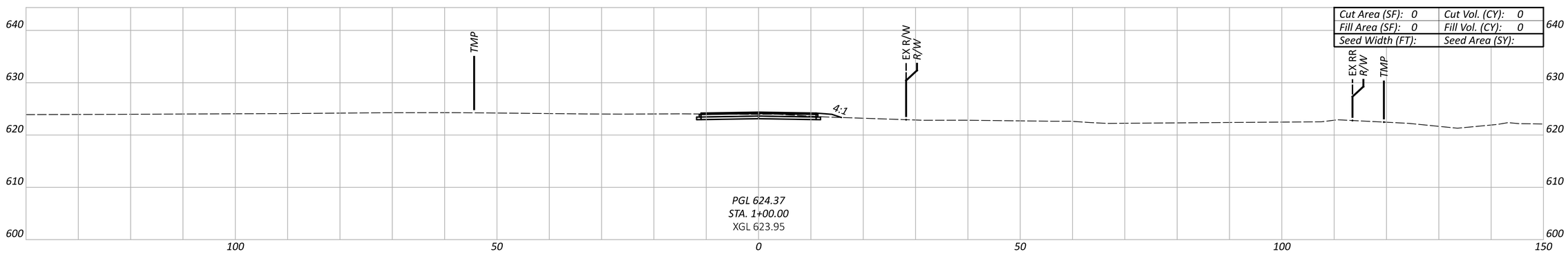

Cut Area (SF): 0	Cut Vol. (CY): 0
Fill Area (SF): 0	Fill Vol. (CY): 0
Seed Width (FT):	Seed Area (SY):

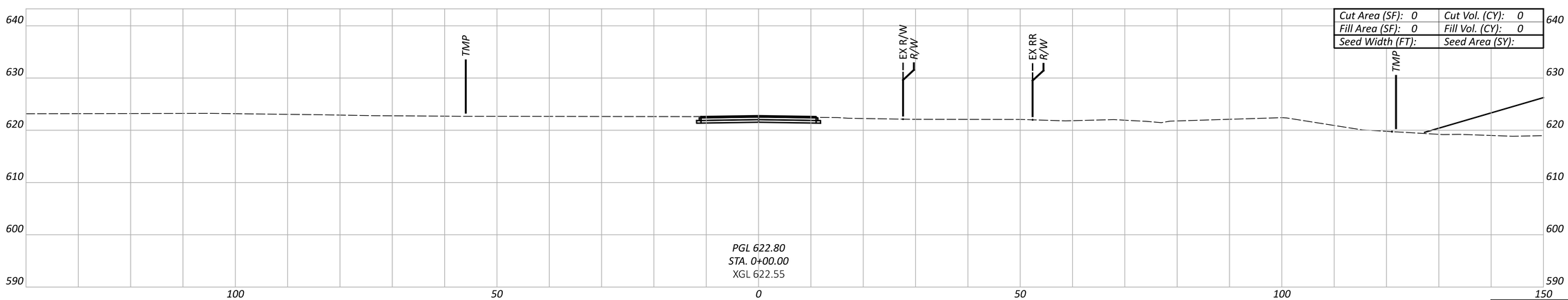

Cut Area (SF): 0	Cut Vol. (CY): 0
Fill Area (SF): 0	Fill Vol. (CY): 0
Seed Width (FT):	Seed Area (SY):

Sheet Totals		
Seeding	Cut	Fill

CROSS SECTIONS - ALTERNATIVE 3
COMMERCIAL DR. 1 - STA. 0+00 TO STA. 2+00

DESIGN AGENCY

HDR

DESIGNER
MJL

REVIEWER
PJD 02/21/25

PROJECT ID
SYMMES RD

SHEET P.72 TOTAL 115

BUT-SYMMES

MODEL: 00000_GX323 PAPERSIZE: 34x22 (in.) DATE: 3/31/2025 TIME: 2:08:18 PM USER: MLORENZ
pw:\\pwhdruseas01:HDR_US_East_01\Documents\Butler_County_Transportation_Improvement_District_-_Ohio\BCTID-SymmesRd_Grd_Separation\6.0_CAD_BIM\6.2_WIP\01_Design\000000\400-Engineering\Roadway\Sheets\Alt 3 Symmes Road Cross Sections

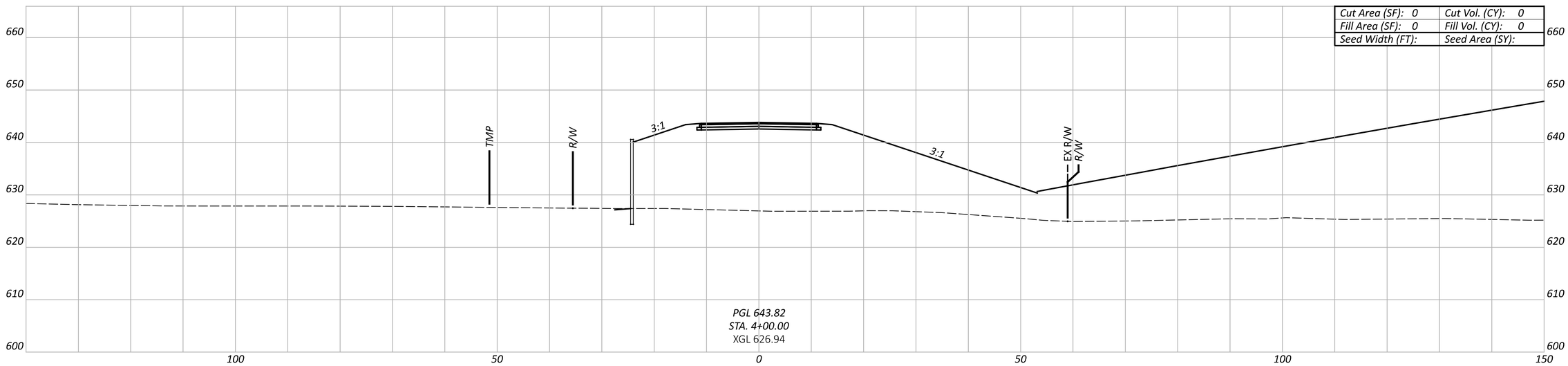

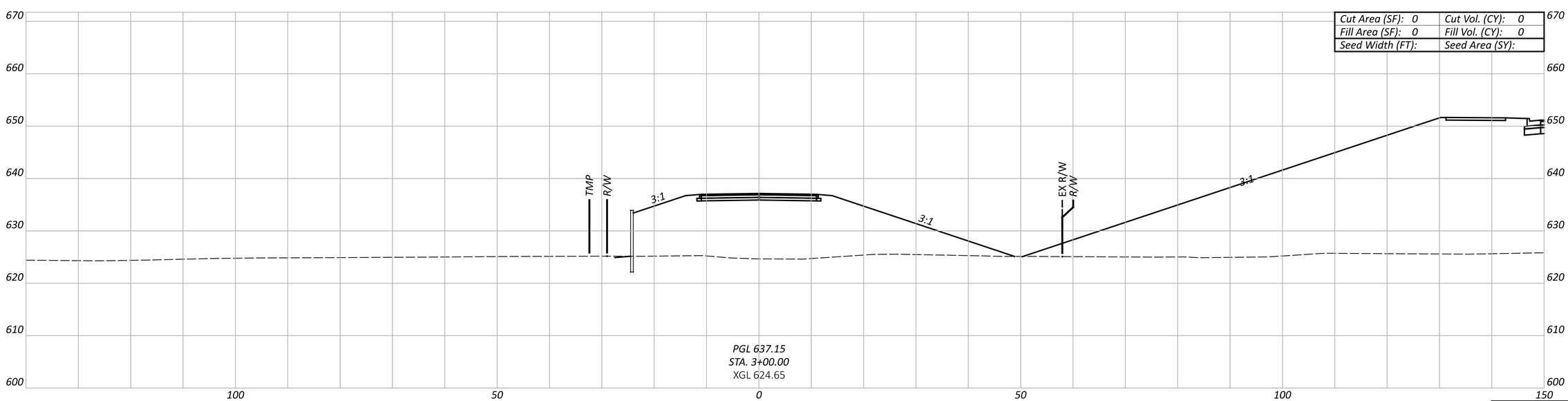

Sheet Totals		
Seeding	Cut	Fill

CROSS SECTIONS - ALTERNATIVE 3
COMMERCIAL DR. 1 - STA. 3+00 TO STA. 4+00

DESIGN AGENCY

HDR

DESIGNER
MJL

REVIEWER
PJD 02/21/25

PROJECT ID
SYMMES RD

SHEET P.73 TOTAL 115

BUT-SYMMES

MODEL: 00000_GX324 PAPERSIZE: 34x22 (in.) DATE: 3/31/2025 TIME: 2:08:22 PM USER: MLORENZ
pw:\\pwhdruseas01:HDR_US_East_01\Documents\Butler_County_Transportation_Improvement_District__-_Ohio\BCTID-SymmesRd_Grd_Separation\6.0_CAD_BIM\6.2_WIP\01_Design\000000\400-Engineering\Roadway\Sheets\Alt 3 Symmes Road Cross Sections

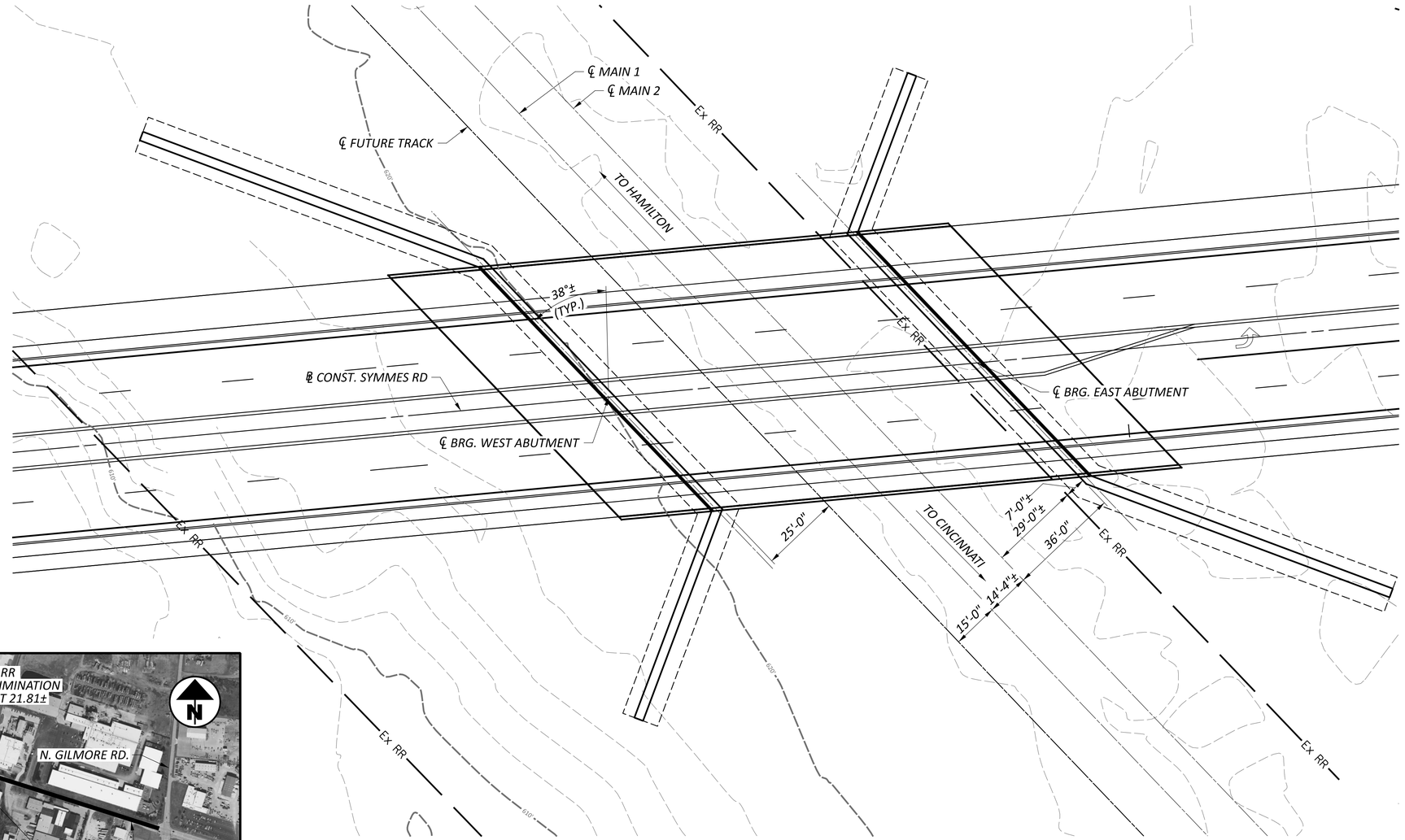

PLAN - ALTERNATIVE 3

0 10' 20' 40'

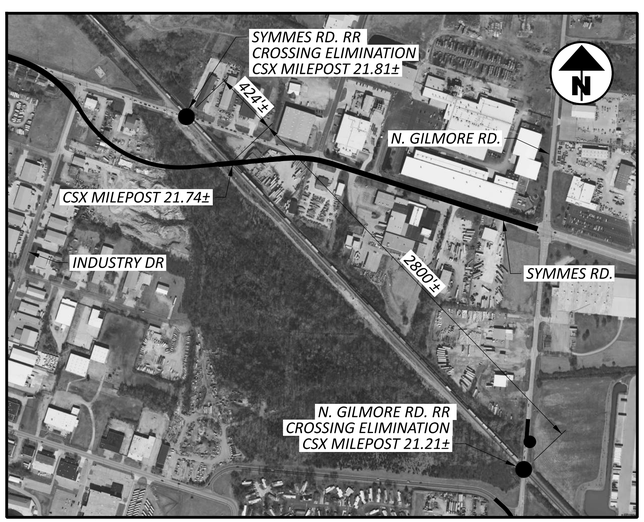

LOCATION MAP

NO SCALE

BUTLER CO. SYMMES RD GRADE SEPARATION
BRIDGE NO. XXX-XX-XX.XX
PRELIMINARY PLAN VIEW - ALTERNATIVE 3

SFN	TBD
DESIGN AGENCY	HDR
DESIGNER	DGJ
CHECKER	DWW
REVIEWER	PHF 2-25-25
PROJECT ID	SYMMES RD
SUBSET	1
TOTAL	2
SHEET	P.74
TOTAL	115

BUT-SYMMES

MODEL: Plan - ALT 3 PAPERSIZE: 34x22 (in.) DATE: 3/31/2025 TIME: 2:09:09 PM USER: MLORENZ
pw:\\pwhdruseas01:HDR_US_East_01\Documents\Butler_County_Transportation_Improvement_District__-_Ohio\BCTID-SymmesRd_Grd_Separation\6.0_CAD_BIM\6.2_WIP\01_Design\000000\960-Exhibits\20241023_Bridge Exhibits for CSX\20231023_Symmes Rd_Bridge Exhibits.dgn

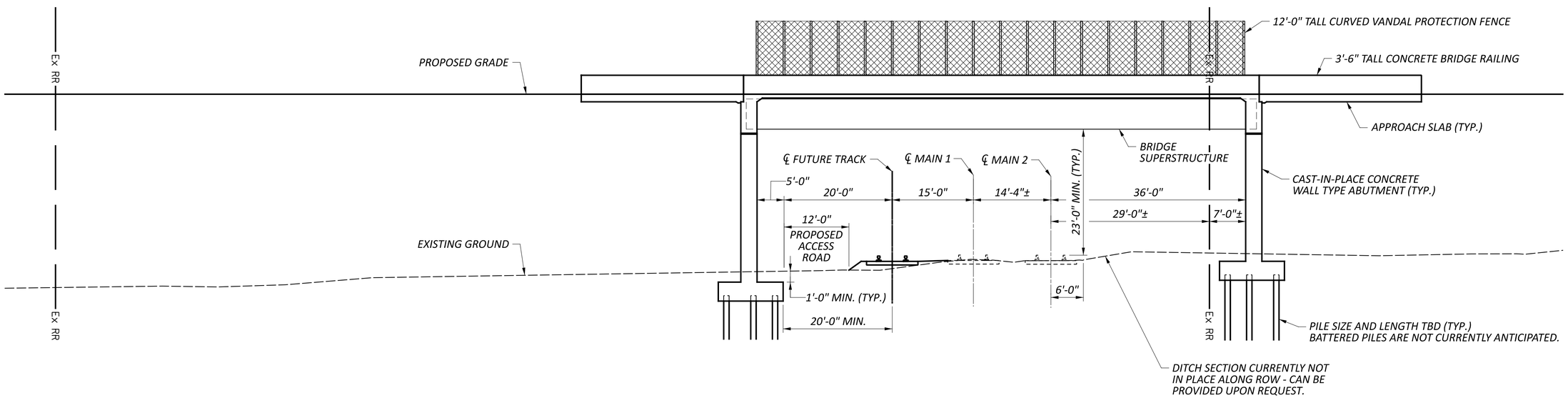

TYPICAL ELEVATION

(WITH FUTURE TRACK AND PROPOSED ACCESS ROAD)
(CUT PERPENDICULAR TO ℄ OF EXISTING TRACKS)

0 10'
5' 20'

NOTES:

1. *IT IS NOT FEASIBLE TO CLEAR SPAN CSX PROPERTY DUE TO GEOMETRIC CONSTRAINTS AND THE OVERALL WIDTH OF THE CSX RIGHT OF WAY WITHIN THE PROJECT LIMITS.*
2. *THE PROPOSED ABUTMENTS ARE LOCATED TO PROVIDE ADEQUATE HORIZONTAL CLEARANCE TO EXISTING AND PROPOSED FUTURE TRACKS. DUE TO GENERAL DESIGN REQUIREMENTS THE ABUTMENTS ARE EXPECTED TO QUALIFY AS HEAVY CONSTRUCTION, AS DEFINED IN THE CSX PUBLIC PROJECT MANUAL. CRASH WALLS ARE NOT ANTICIPATED.*
3. *EXISTING UTILITIES ARE NOT SHOWN. THE LOCATION OF EXISTING UTILITIES WILL BE COORDINATED AND INCORPORATED INTO THE PLANS DURING FINAL DESIGN.*

BUTLER CO. SYMMES RD GRADE SEPARATION
BRIDGE NO. XXX-XX-XX.XX
PRELIMINARY TYPICAL ELEVATION VIEW - ALTERNATIVE 3

SFN	TBD
DESIGN AGENCY	HDR
DESIGNER	JML
CHECKER	DWW
REVIEWER	PHF 2-25-25
PROJECT ID	SYMMES RD
SUBSET	2
TOTAL	2
SHEET	P.75
TOTAL	115

BUT-SYMMES

MODEL: Section - ALT 3 PAPERSIZE: 34x22 (in.) DATE: 3/31/2025 TIME: 2:09:15 PM USER: MLORENZ
pw:\\pwhdruseas01:HDR_US_East_01\Documents\Butler_County_Transportation_Improvement_District_-_Ohio\BCTID-SymmesRd_Grd_Separation\6.0_CAD_BIM\6.2_WIP\01_Design\000000\960-Exhibits\20241023_Bridge Exhibits for CSX\20231023_Symmes Rd_Bridge Exhibits.dgn

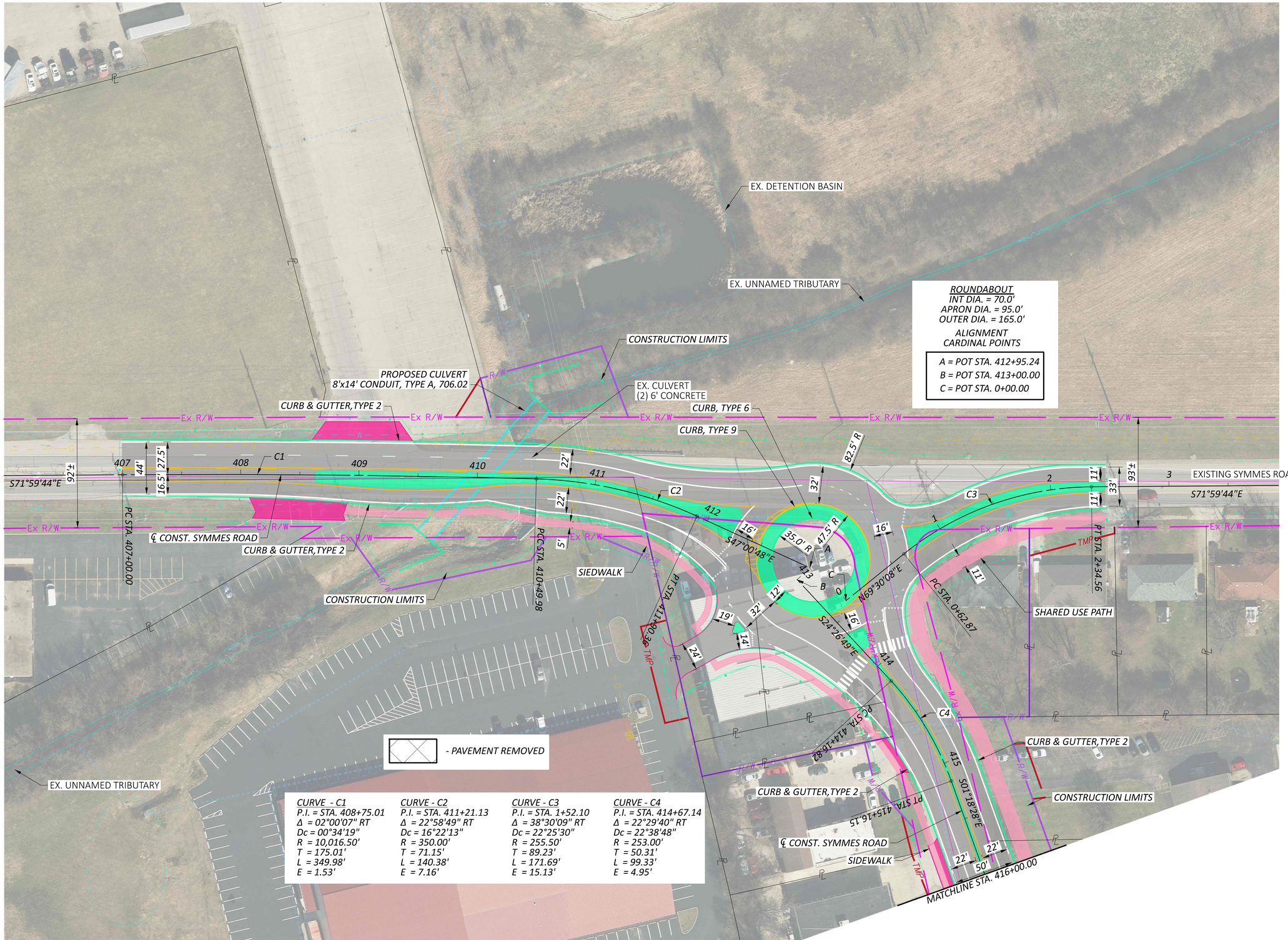

HORIZONTAL SCALE IN FEET
0 20 40 80

PLAN - ALTERNATIVE 4
SYMMES RD. - STA. 407+00 TO STA. 416+00

DESIGN AGENCY
HDR

DESIGNER
MJL

REVIEWER
PJD 02/21/25

PROJECT ID
SYMMES RD

SHEET P.76 TOTAL 115

BUT-SYMMES

MODEL: 00000_GP401 PAPERSIZE: 34x22 (in.) DATE: 3/31/2025 TIME: 2:09:30 PM USER: MLORENZ
pw:\\pwhdruseas01:HDR_US_East_01\Documents\Butler_County_Transportation_Improvement_District_-_Ohio\BCTID-SymmesRd_Grd_Separation\6.0_CAD_BIM\6.2_WIP\01_Design\000000\400-Engineering\Roadway\Sheets\Alt 4 Roadway Plan 1

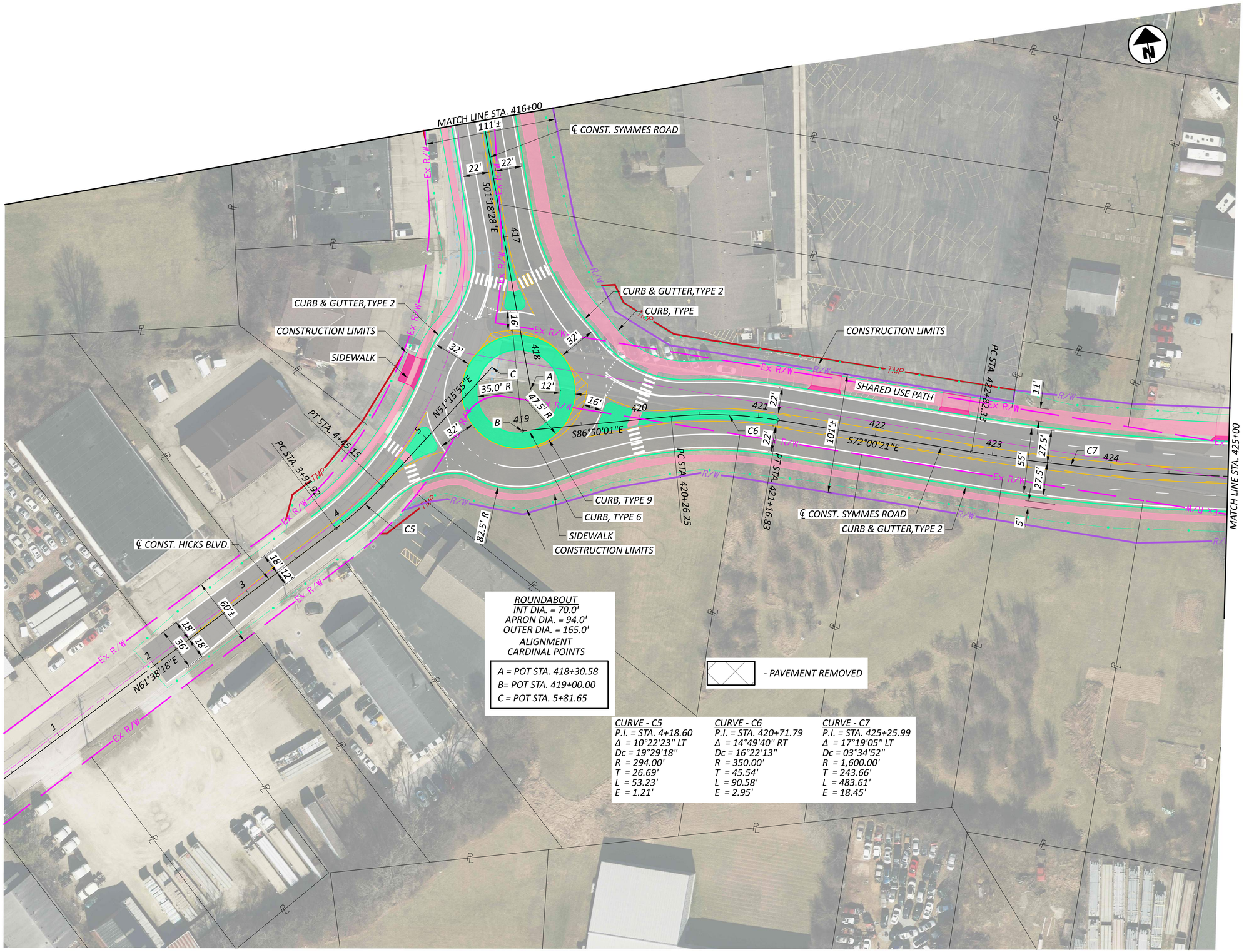

HORIZONTAL SCALE IN FEET
0 20 40 80

PLAN - ALTERNATIVE 4
SYMMES RD. - STA. 416+00 TO STA. 425+00

DESIGN AGENCY
HDR

DESIGNER
MJL

REVIEWER
PJD 02/21/25

PROJECT ID
SYMMES RD

SHEET P.77 TOTAL 115

BUT-SYMMES

MODEL: 00000_GP402 PAPERSIZE: 34x22 (in.) DATE: 3/31/2025 TIME: 2:09:45 PM USER: MLORENZ
pw:\\pwhdruseas01:HDR_US_East_01\Documents\Butler_County_Transportation_Improvement_District_-_Ohio\BCTID-SymmesRd_Grd_Separation\6.0_CAD_BIM\6.2_WIP\01_Design\000000\400-Engineering\Roadway\Sheets\Alt 4 Roadway Plan 2

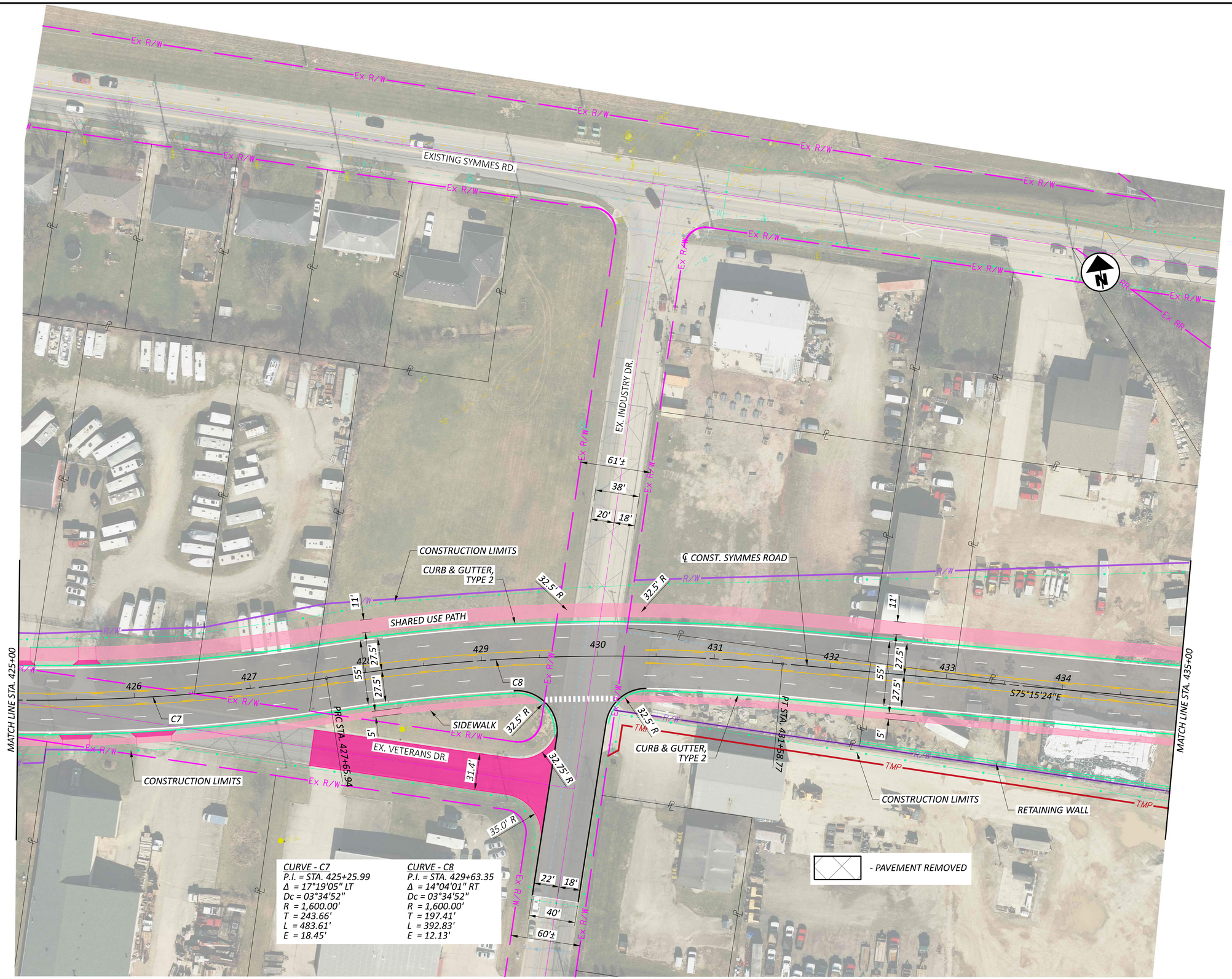

HORIZONTAL SCALE IN FEET
0 20 40 80

PLAN - ALTERNATIVE 4
SYMMES RD. - STA. 425+00 TO STA. 435+00

DESIGN AGENCY
HDR

DESIGNER	MJL
REVIEWER	PJD 02/21/25
PROJECT ID	SYMMES RD
SHEET	P.78
TOTAL	115

BUT-SYMMES

MODEL: 00000_GP403 PAPERSIZE: 34x22 (in.) DATE: 3/31/2025 TIME: 2:10:02 PM USER: MLORENZ
pw:\\pwhdruseas01:HDR_US_East_01\Documents\Butler_County_Transportation_Improvement_District_-_Ohio\BCTID-SymmesRd_Grd_Separation\6.0_CAD_BIM\6.2_WIP\01_Design\000000\400-Engineering\Roadway\Sheets\Alt 4 Roadway Plan 3

HORIZONTAL SCALE IN FEET
0 20 40 80

PLAN - ALTERNATIVE 4
SYMMES RD. - STA. 435+00 TO STA. 445+00

BUT-SYMMES

MODEL: 00000_GP404 PAPERSIZE: 34x22 (in.) DATE: 3/31/2025 TIME: 2:10:18 PM USER: MLORENZ
pw:\\pwhdruseas01:HDR_US_East_01\Documents\Butler_County_Transportation_Improvement_District_-_Ohio\BCTID-SymmesRd_Grd_Separation\6.0_CAD_BIM\6.2_WIP\01_Design\000000\400-Engineering\Roadway\Sheets\Alt 4 Roadway Plan 4

DESIGN AGENCY
HDR

DESIGNER
MJL

REVIEWER
PJD 02/21/25

PROJECT ID
SYMMES RD

SHEET P.79 TOTAL 115

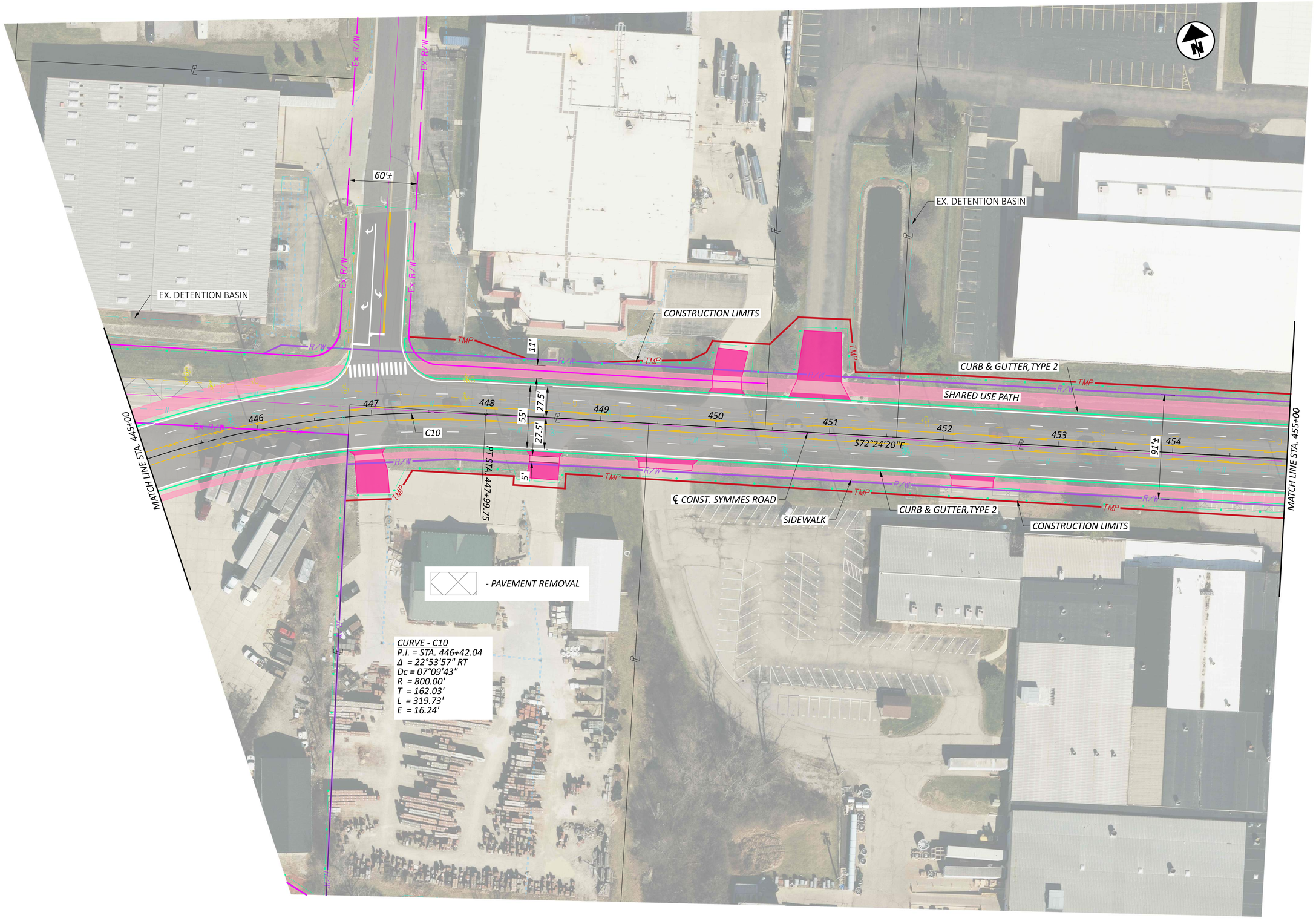

HORIZONTAL SCALE IN FEET
0 20 40 80

PLAN - ALTERNATIVE 4
SYMMES RD. - STA. 445+00 TO STA. 455+00

DESIGN AGENCY
HDR

DESIGNER
MJL

REVIEWER
PJD 02/21/25

PROJECT ID
SYMMES RD

SHEET P.80 TOTAL 115

BUT-SYMMES

MODEL: 00000_GP405 PAPERSIZE: 34x22 (in.) DATE: 3/31/2025 TIME: 2:10:33 PM USER: MLORENZ
pw:\\pwhdruseas01:HDR_US_East_01\Documents\Butler_County_Transportation_Improvement_District_-_Ohio\BCTID-SymmesRd_Grd_Separation\6.0_CAD_BIM\6.2_WIP\01_Design\000000\400-Engineering\Roadway\Sheets\Alt 4 Roadway Plan 5

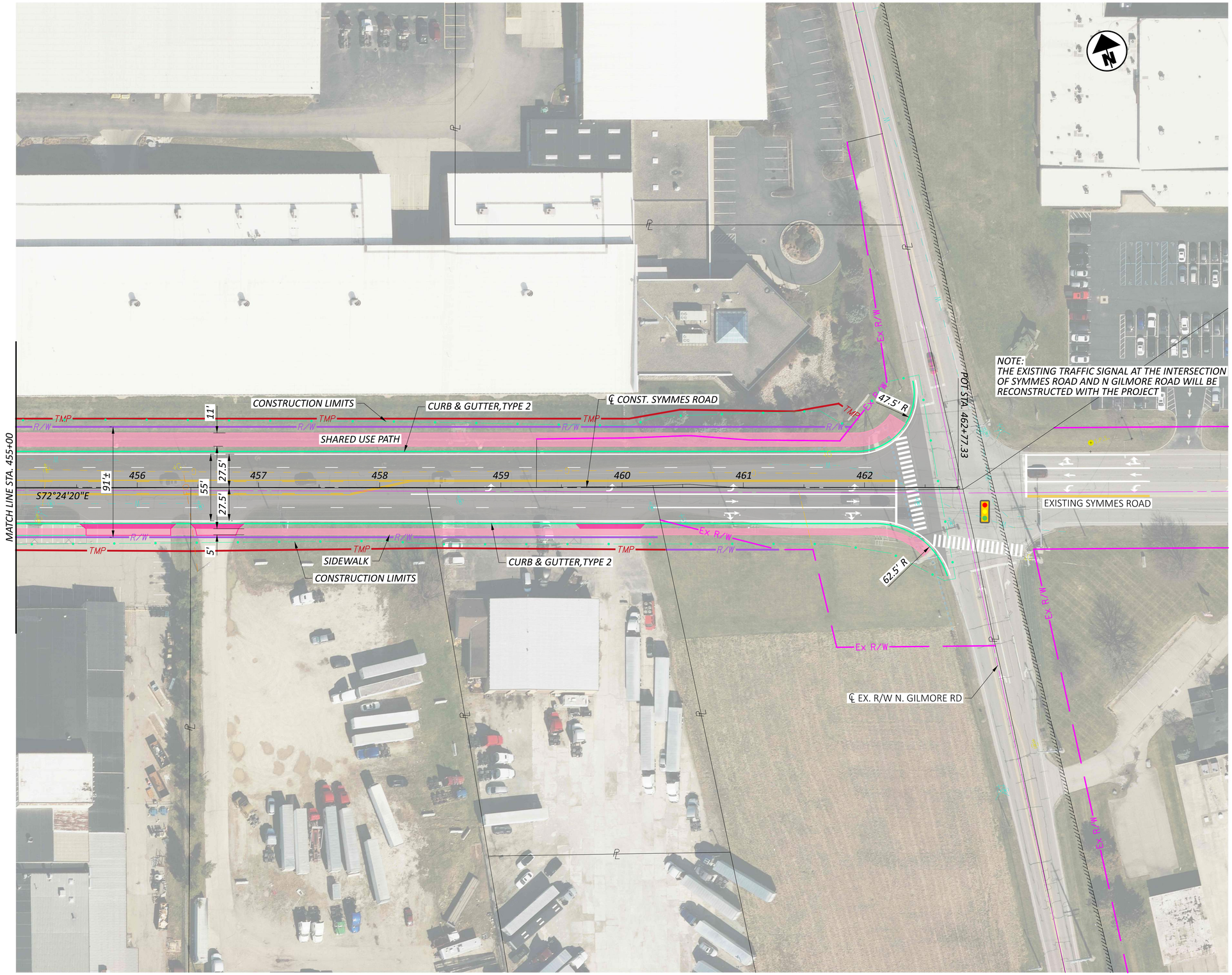

HORIZONTAL SCALE IN FEET
0 20 40 80

PLAN - ALTERNATIVE 4
SYMMES RD. - STA. 455+00 TO END PROJECT

DESIGN AGENCY
HDR

DESIGNER
MJL

REVIEWER
PJD 02/21/25

PROJECT ID
SYMMES RD

SHEET P.81 TOTAL 115

BUT-SYMMES

MODEL: 00000_GP406 PAPERSIZE: 34x22 (in.) DATE: 3/31/2025 TIME: 2:10:48 PM USER: MLORENZ
pw:\\pwhdruseas01:HDR_US_East_01\Documents\Butler_County_Transportation_Improvement_District_-_Ohio\BCTID-SymmesRd_Grd_Separation\6.0_CAD_BIM\6.2_WIP\01_Design\000000\400-Engineering\Roadway\Sheets\Alt 4 Roadway Plan 6

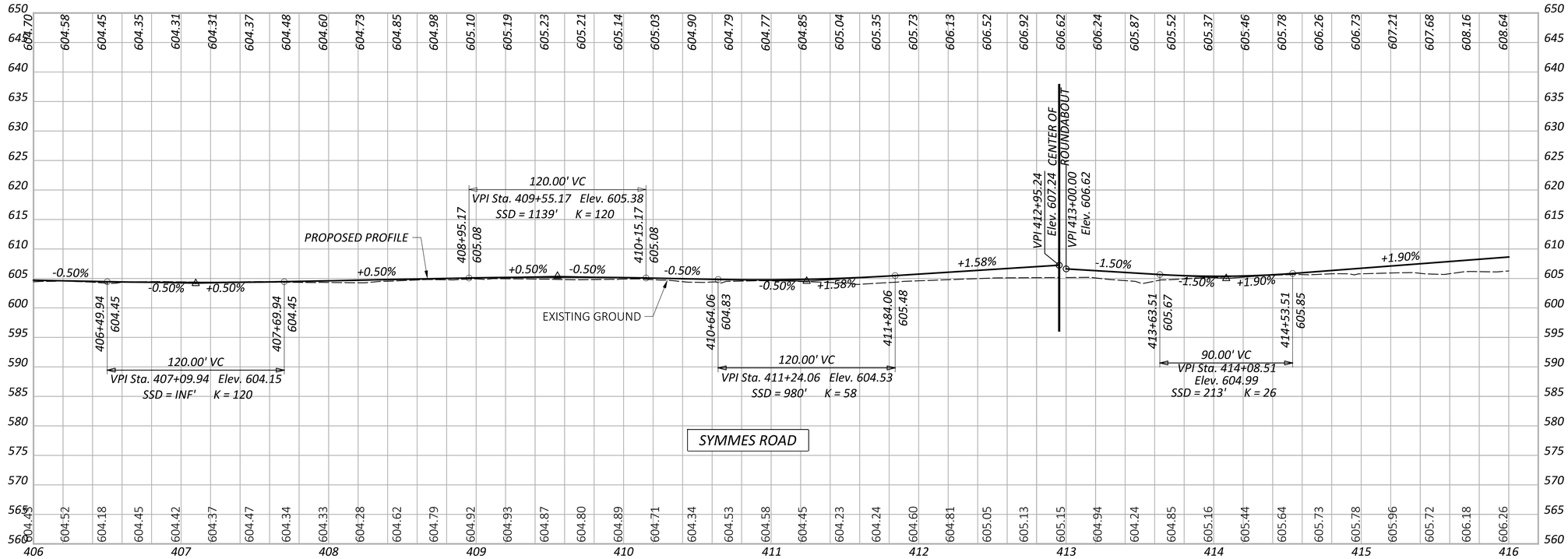

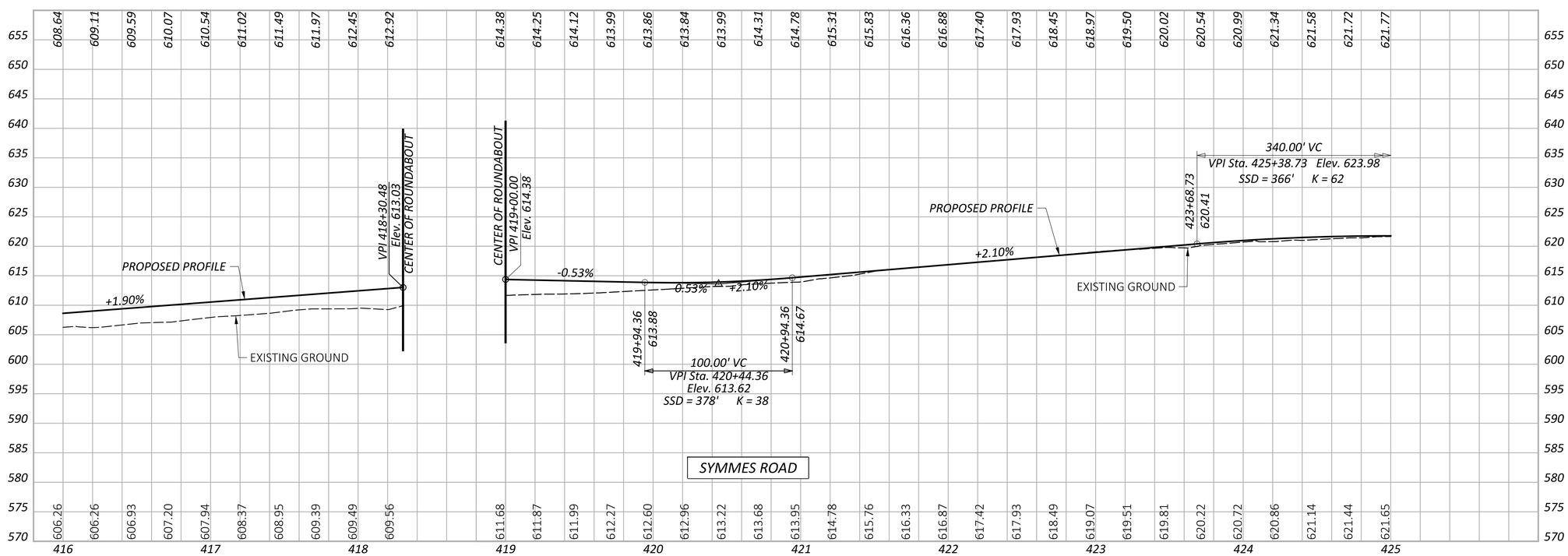

PROFILE - ALTERNATIVE 4
SYMMES ROAD

DESIGN AGENCY

HDR

DESIGNER
MJL

REVIEWER
PJD 02/21/25

PROJECT ID
SYMMES RD

SHEET P.82 TOTAL 115

BUT-SYMMES

MODEL: 00000_GF401 PAPERSIZE: 34x22 (in.) DATE: 3/31/2025 TIME: 2:11:02 PM USER: MLORENZ
pw:\\pwhdruseas01:HDR_US_East_01\Documents\Butler_County_Transportation_Improvement_District_-_Ohio\BCTID-SymmesRd_Grd_Separation\6.0_CAD_BIM\6.2_WIP\01_Design\000000\400-Engineering\Roadway\Sheets\Alt 4 Symmes Road Profile 1

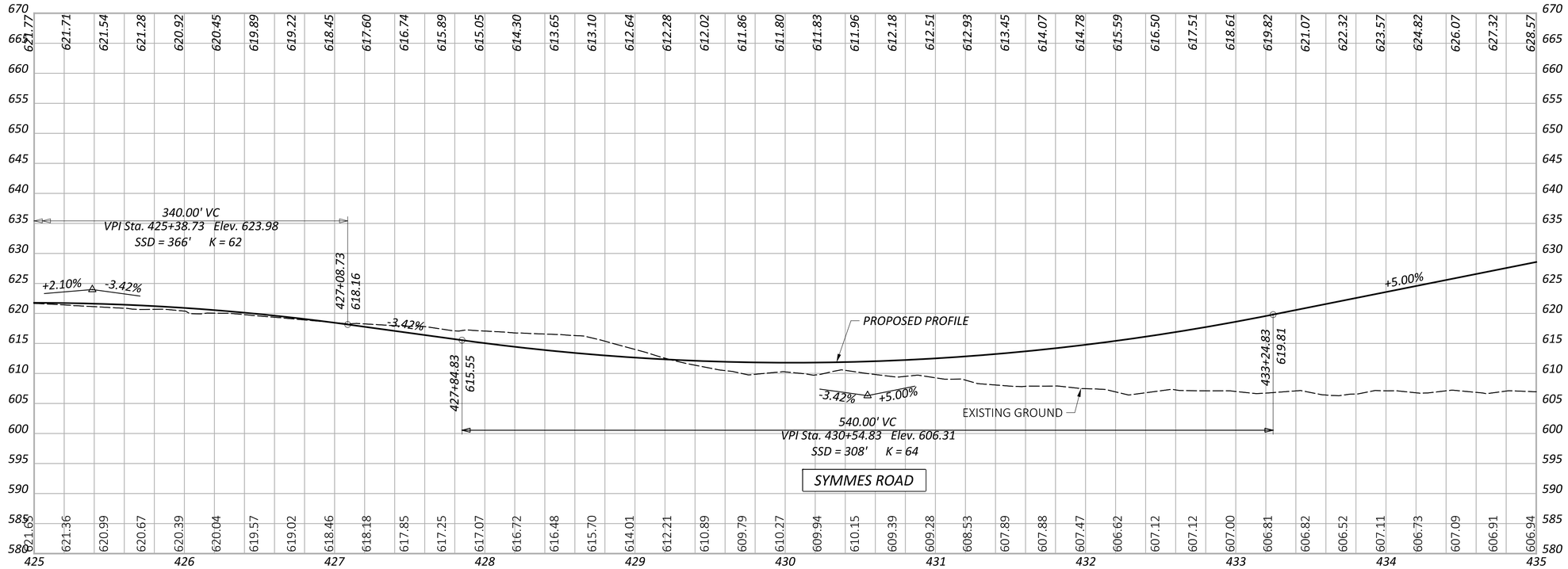

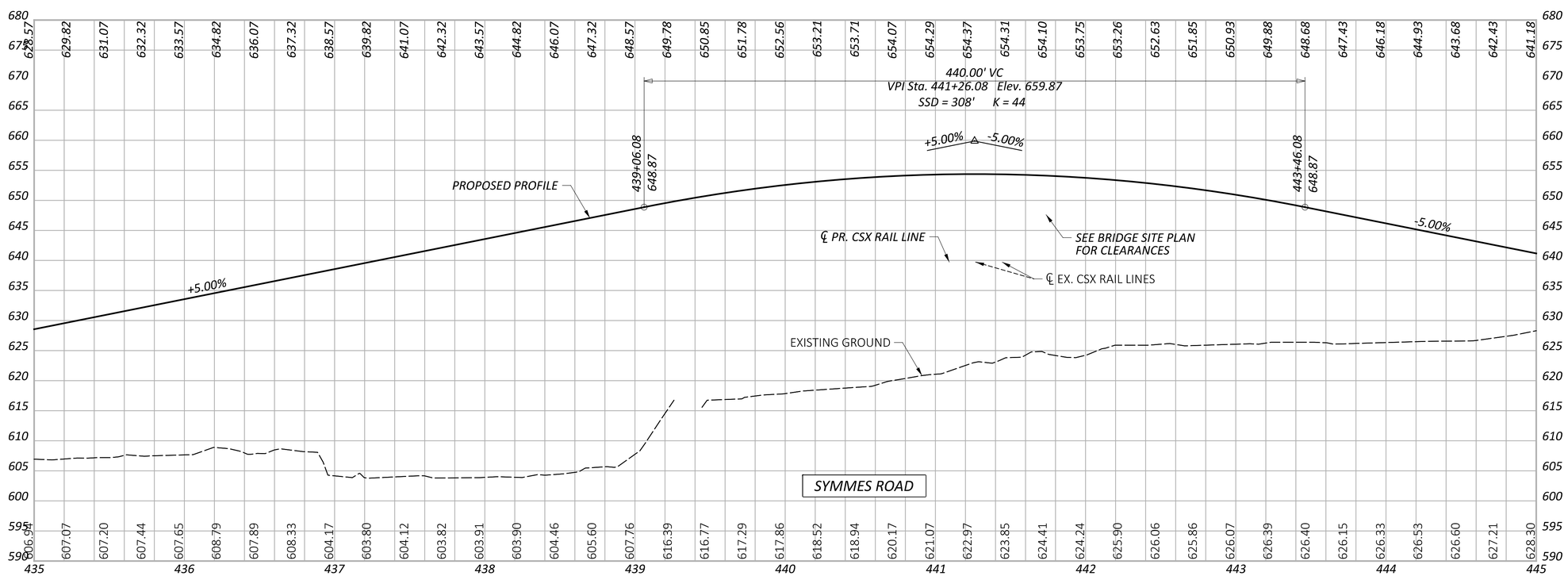

PROFILE - ALTERNATIVE 4
SYMMES ROAD

BUT-SYMMES

MODEL: 00000_GF402 PAPERSIZE: 34x22 (in.) DATE: 3/31/2025 TIME: 2:11:12 PM USER: MLORENZ
pw:\\pwhdruseas01:HDR_US_East_01\Documents\Butler_County_Transportation_Improvement_District_-_Ohio\BCTID-SymmesRd_Grd_Separation\6.0_CAD_BIM\6.2_WIP\01_Design\000000\400-Engineering\Roadway\Sheets\Alt 4 Symmes Road Profile 2

DESIGN AGENCY

DESIGNER
MJL

REVIEWER
PJD 02/21/25

PROJECT ID
SYMMES RD

SHEET P.83 TOTAL 115

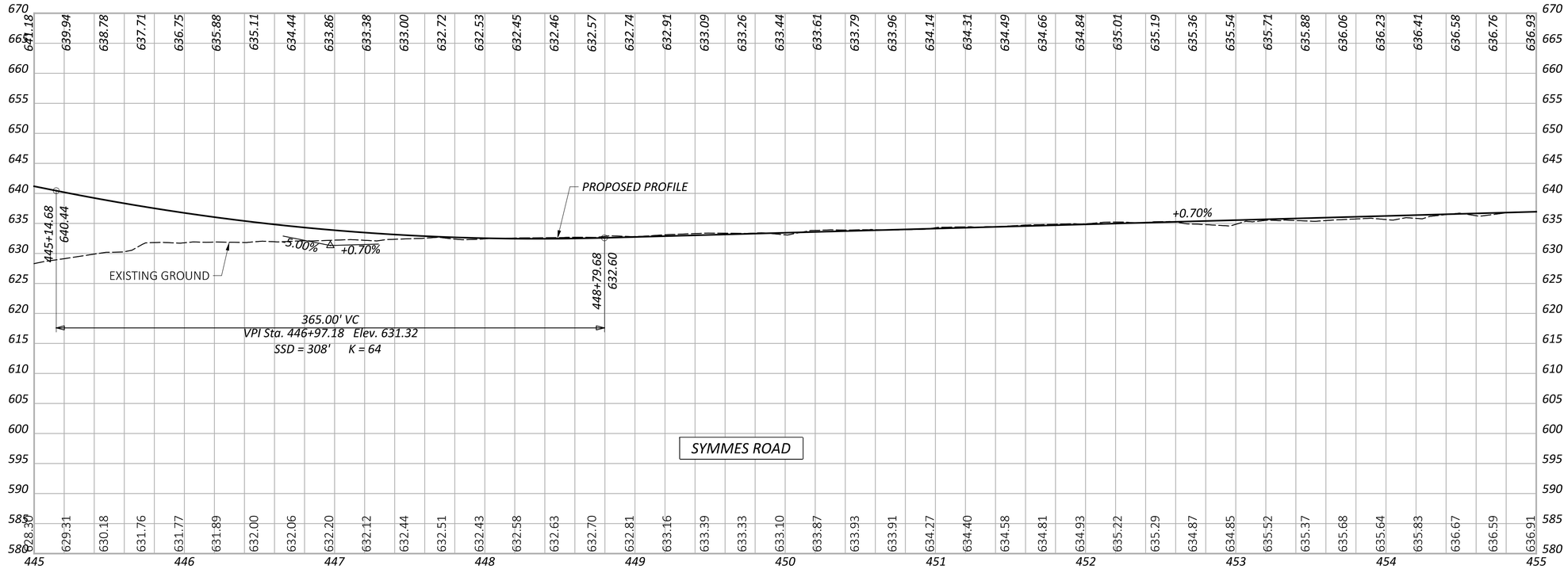

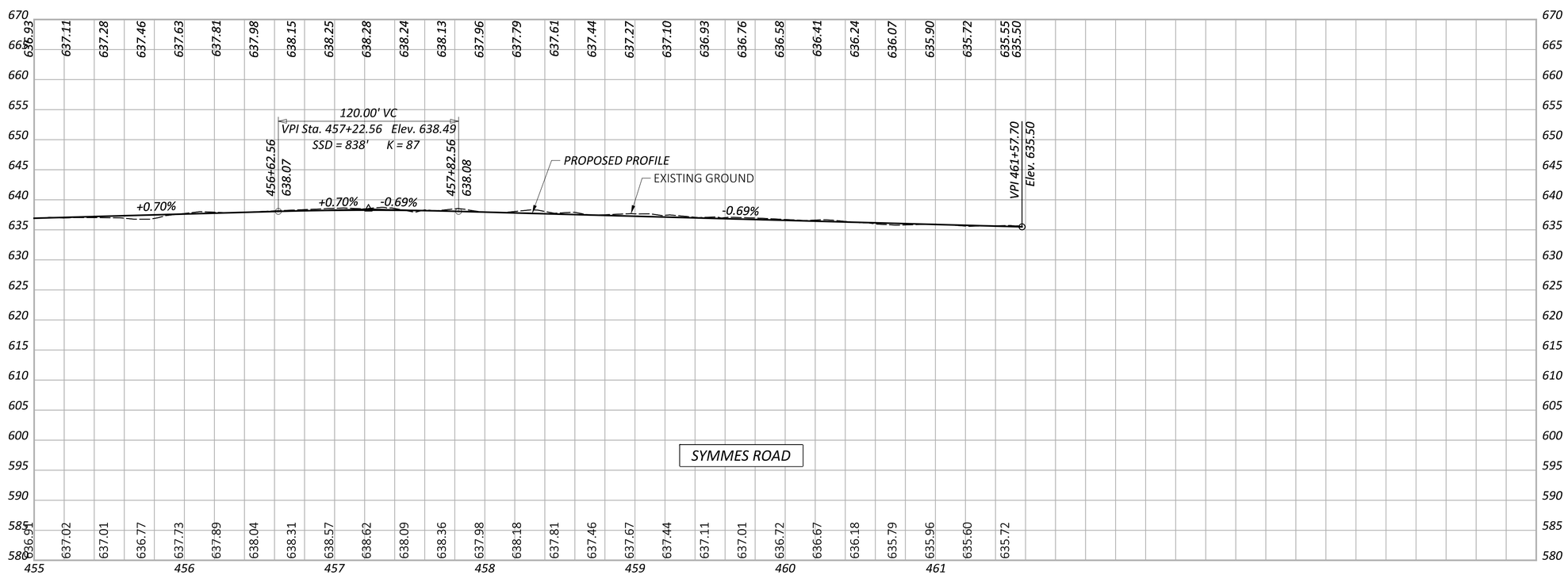

PROFILE - ALTERNATIVE 4
SYMMES ROAD

DESIGN AGENCY

HDR

DESIGNER
MJL

REVIEWER
PJD 02/21/25

PROJECT ID
SYMMES RD

SHEET P.84 TOTAL 115

BUT-SYMMES

MODEL: 00000_GF403 PAPERSIZE: 34x22 (in.) DATE: 3/31/2025 TIME: 2:11:22 PM USER: MLORENZ
pw:\\pwhdruseas01:HDR_US_East_01\Documents\Butler_County_Transportation_Improvement_District_-_Ohio\BCTID-SymmesRd_Grd_Separation\6.0_CAD_BIM\6.2_WIP\01_Design\000000\400-Engineering\Roadway\Sheets\Alt 4 Symmes Road Profile 3

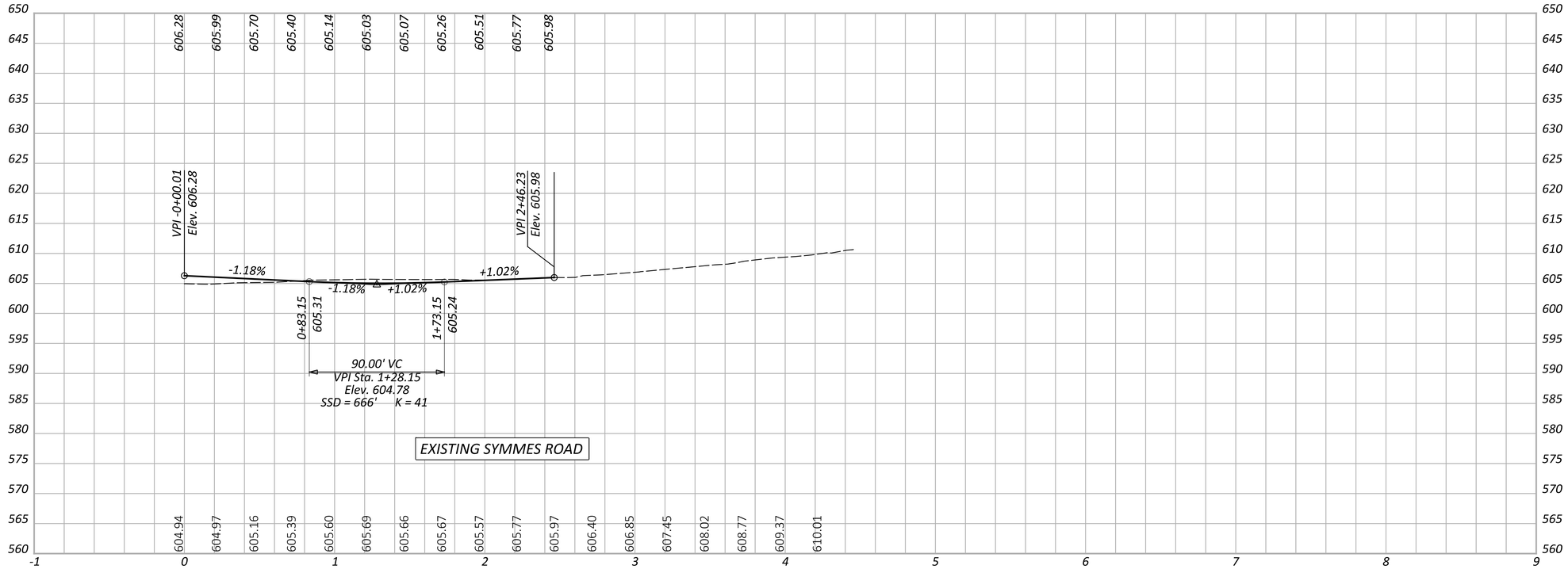

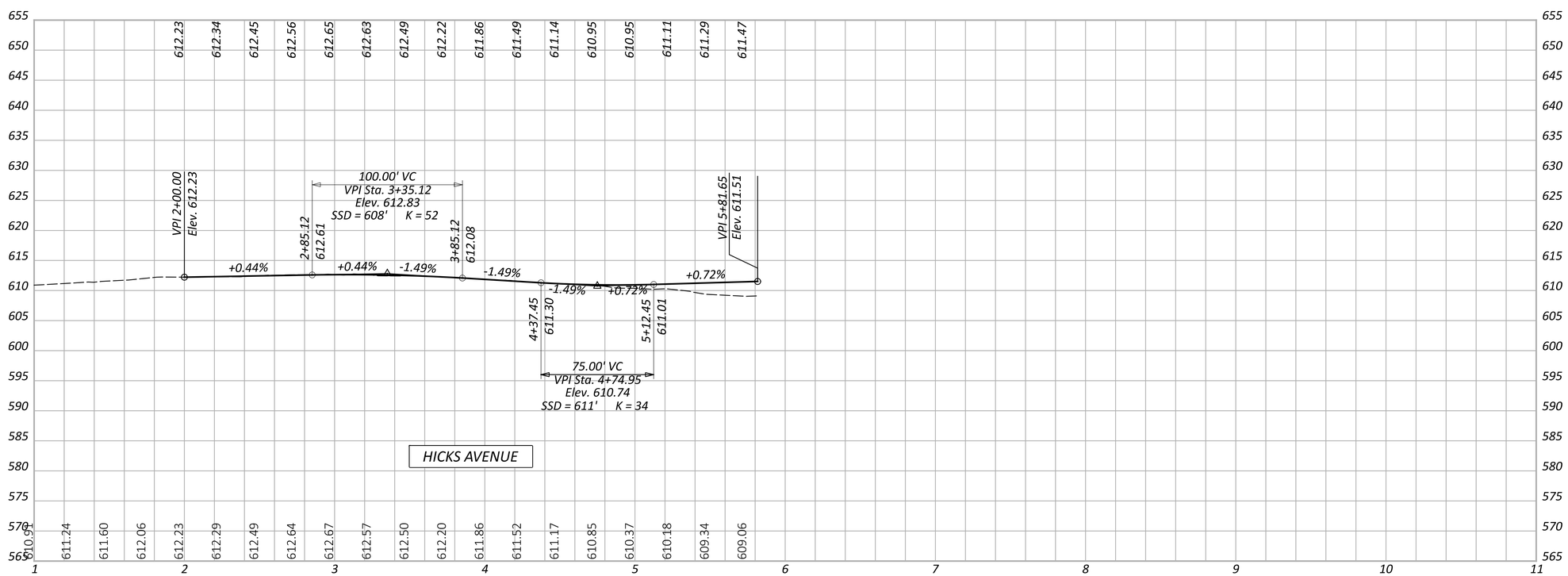

PROFILE - ALTERNATIVE 4
OLD SYMMES RD. & HICKS AVE.

DESIGN AGENCY

HDR

DESIGNER
MJL

REVIEWER
PJD 02/21/25

PROJECT ID
SYMMES RD

SHEET P.85 TOTAL 115

BUT-SYMMES

MODEL: 00000_GF404 PAPERSIZE: 34x22 (in.) DATE: 3/31/2025 TIME: 2:11:32 PM USER: MLORENZ
pw:\\pwhdruseas01:HDR_US_East_01\Documents\Butler_County_Transportation_Improvement_District_-_Ohio\BCTID-SymmesRd_Grd_Separation\6.0_CAD_BIM\6.2_WIP\01_Design\000000\400-Engineering\Roadway\Sheets\00000_GF404.dgn

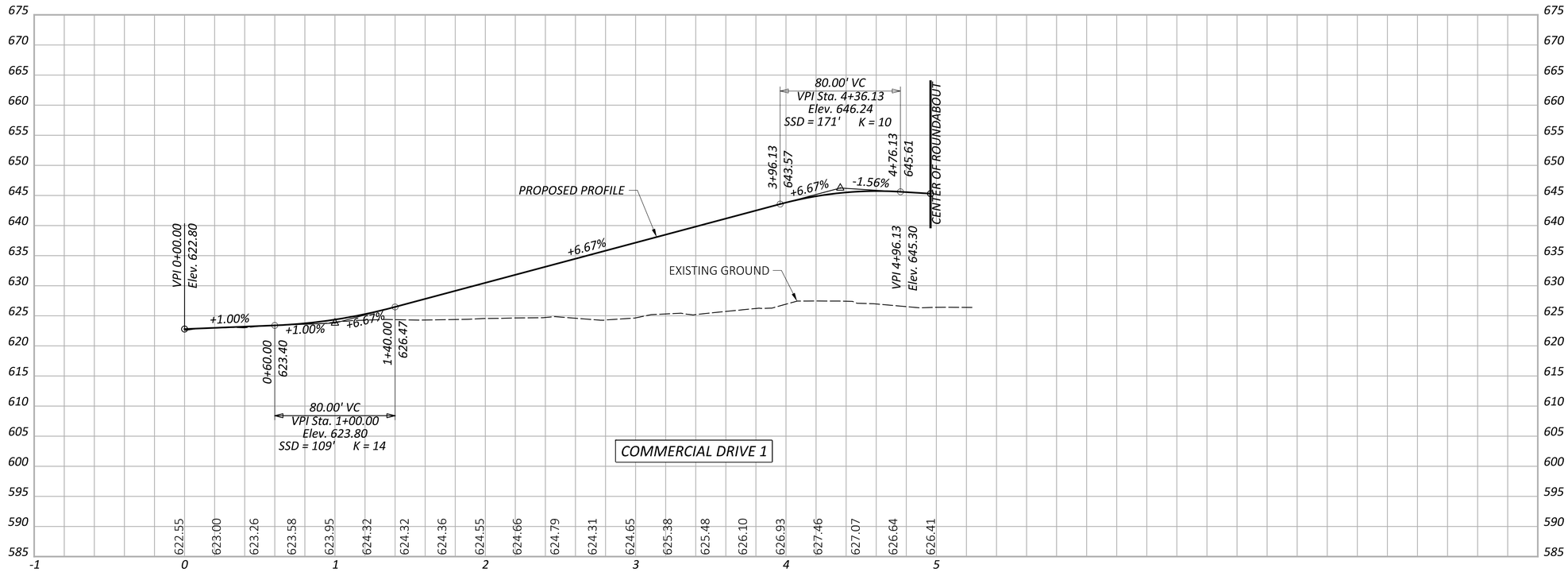

PROFILE - ALTERNATIVE 4
COMMERCIAL DRIVE 1

BUT-SYMMES

MODEL: 00000_GF405 PAPERSIZE: 34x22 (in.) DATE: 3/31/2025 TIME: 2:11:42 PM USER: MLORENZ
pw:\\pwhdruseas01:HDR_US_East_01\Documents\Butler_County_Transportation_Improvement_District_-_Ohio\BCTID-SymmesRd_Grd_Separation\6.0_CAD_BIM\6.2_WIP\01_Design\000000\400-Engineering\Roadway\Sheets\00000_GF405.dgn

DESIGN AGENCY

HDR

DESIGNER
MJL

REVIEWER
PJD 02/21/25

PROJECT ID
SYMMES RD

SHEET P.86 TOTAL 115

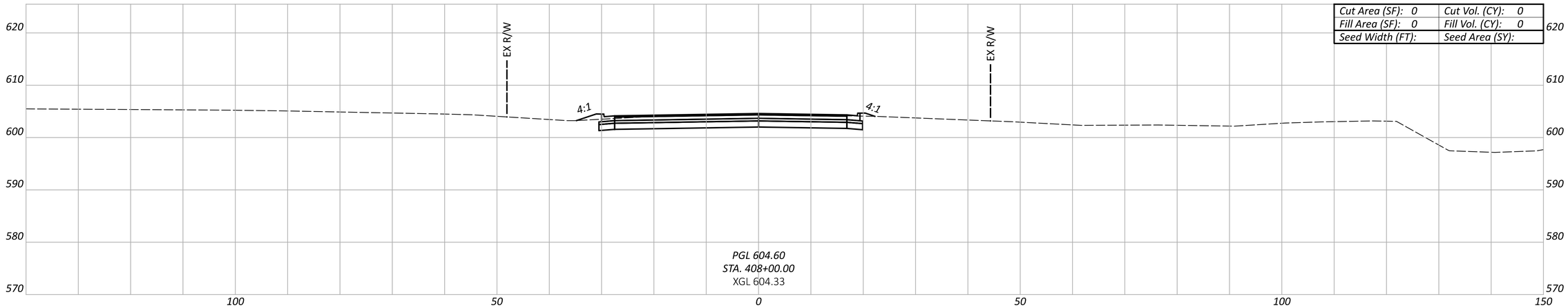

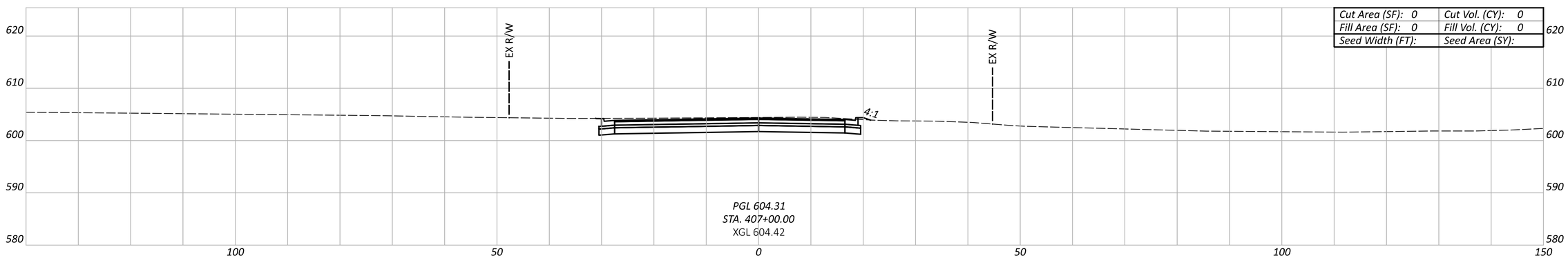

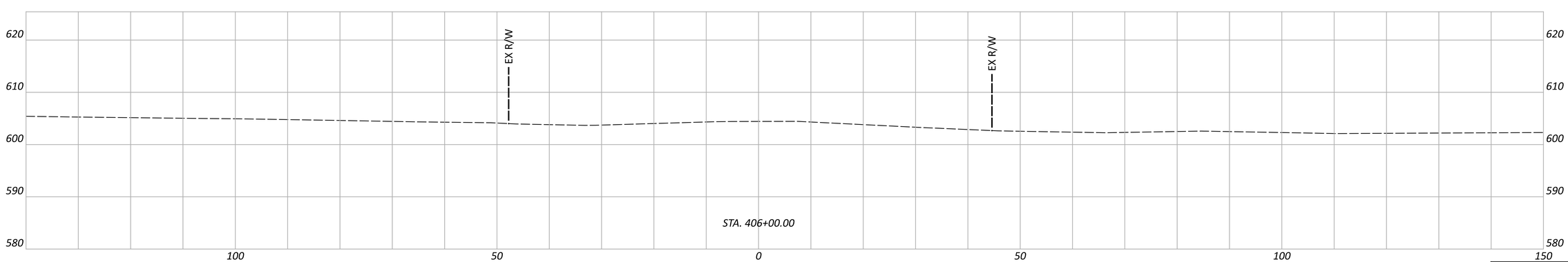

Sheet Totals		
Seeding	Cut	Fill

CROSS SECTIONS - ALTERNATIVE 4
SYMMES RD. - STA. 406+00 TO STA. 408+00

DESIGN AGENCY

HDR

DESIGNER
MJL

REVIEWER
PJD 02/21/25

PROJECT ID
SYMMES RD

SHEET P.87 TOTAL 115

BUT-SYMMES

MODEL: 00000_GX401 PAPERSIZE: 34x22 (in.) DATE: 3/31/2025 TIME: 2:11:51 PM USER: MLORENZ
pw:\\pwhdruseas01:HDR_US_East_01\Documents\Butler_County_Transportation_Improvement_District_-_Ohio\BCTID-SymmesRd_Grd_Separation\6.0_CAD_BIM\6.2_WIP\01_Design\000000\400-Engineering\Roadway\Sheets\Alt 4 Symmes Road Cross Sections

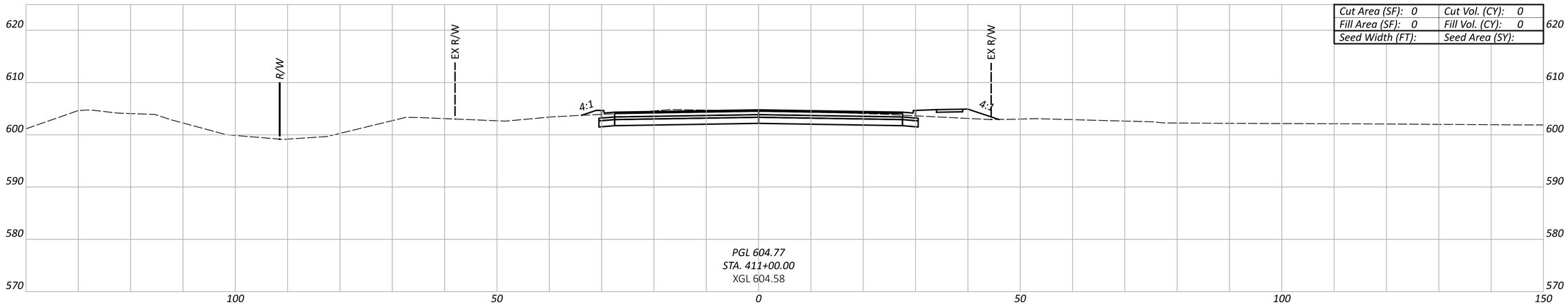

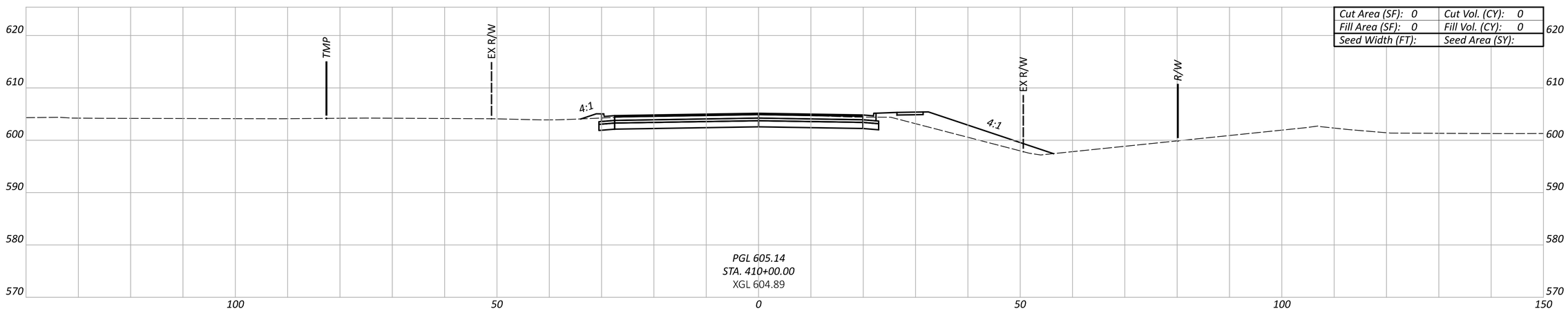

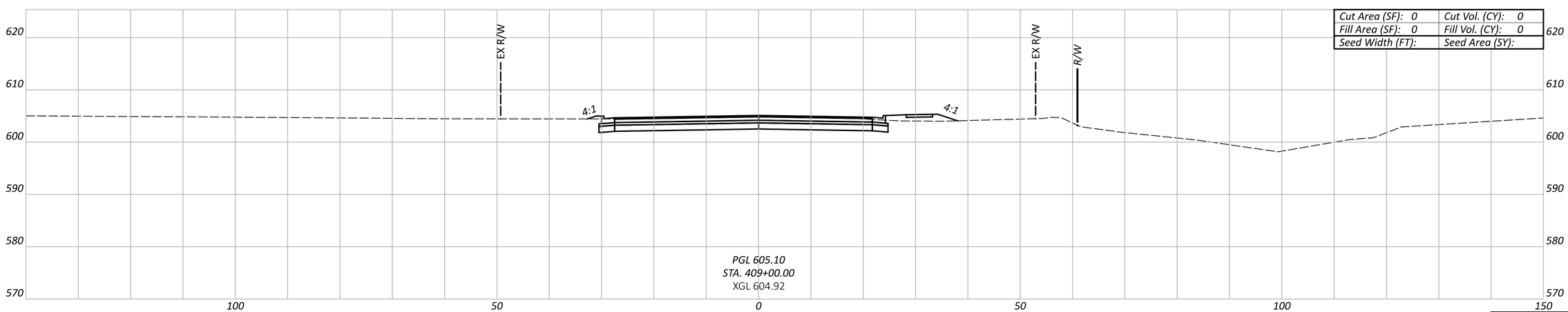

Sheet Totals		
Seeding	Cut	Fill

CROSS SECTIONS - ALTERNATIVE 4
SYMMES RD. - STA. 409+00 TO STA. 411+00

DESIGN AGENCY

HDR

DESIGNER
MJL

REVIEWER
PJD 02/21/25

PROJECT ID
SYMMES RD

SHEET P.88 TOTAL 115

BUT-SYMMES

MODEL: 00000_GX402 PAPERSIZE: 34x22 (in.) DATE: 3/31/2025 TIME: 2:11:55 PM USER: MLORENZ
pw:\\pwhdruseas01:HDR_US_East_01\Documents\Butler_County_Transportation_Improvement_District_-_Ohio\BCTID-SymmesRd_Grd_Separation\6.0_CAD_BIM\6.2_WIP\01_Design\000000\400-Engineering\Roadway\Sheets\Alt 4 Symmes Road Cross Sections

BUT-SYMMES

MODEL: 00000_GX403 PAPERSIZE: 34x22 (in.) DATE: 3/31/2025 TIME: 2:11:58 PM USER: MLORENZ
pw:\\pwhdruseas01:HDR_US_East_01\Documents\Butler_County_Transportation_Improvement_District_-_Ohio\BCTID-SymmesRd_Grd_Separation\6.0_CAD_BIM\6.2_WIP\01_Design\000000\400-Engineering\Roadway\Sheets\Alt 4 Symmes Road Cross Sections

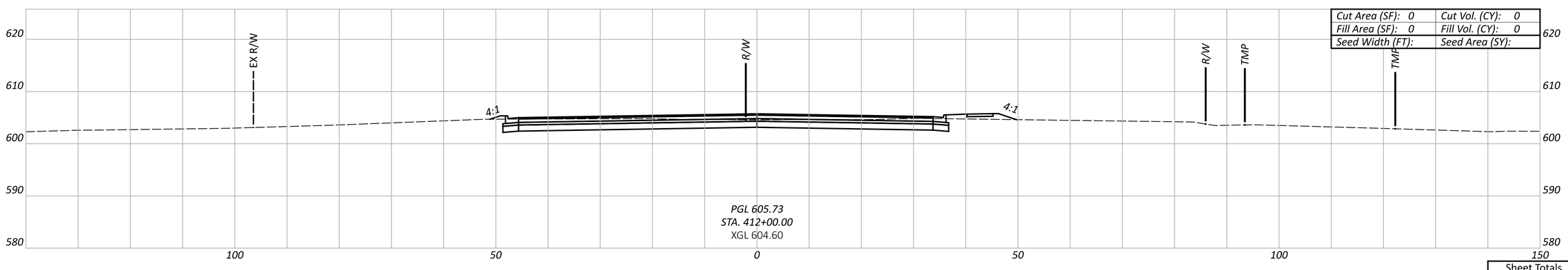

Cut Area (SF): 0	Cut Vol. (CY): 0
Fill Area (SF): 0	Fill Vol. (CY): 0
Seed Width (FT):	Seed Area (SY):

Sheet Totals		
Seeding	Cut	Fill

CROSS SECTIONS - ALTERNATIVE 4
SYMMES RD. - STA. 412+00

DESIGN AGENCY

HDR

DESIGNER
MJL

REVIEWER
PJD 02/21/25

PROJECT ID
SYMMES RD

SHEET P.89 TOTAL 115

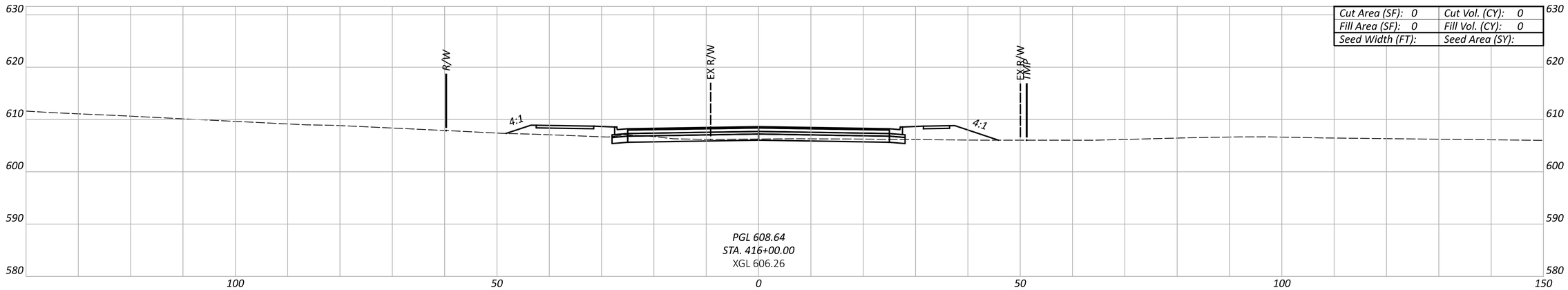

Cut Area (SF): 0	Cut Vol. (CY): 0
Fill Area (SF): 0	Fill Vol. (CY): 0
Seed Width (FT):	Seed Area (SY):

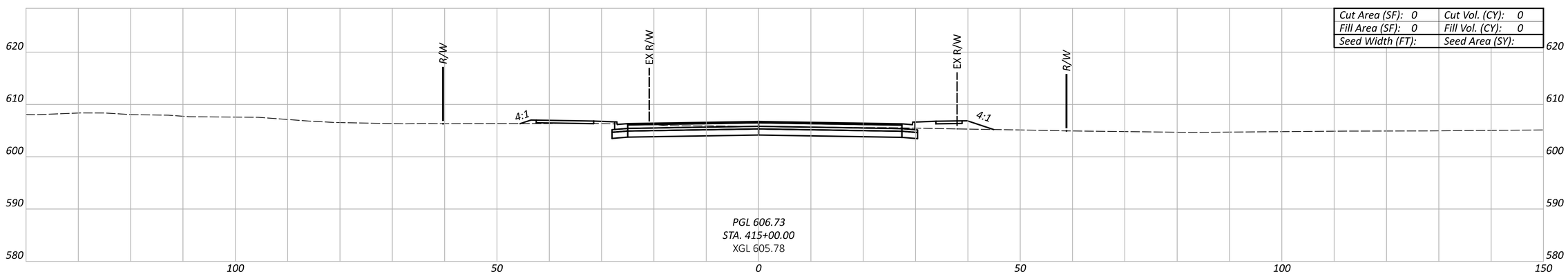

Cut Area (SF): 0	Cut Vol. (CY): 0
Fill Area (SF): 0	Fill Vol. (CY): 0
Seed Width (FT):	Seed Area (SY):

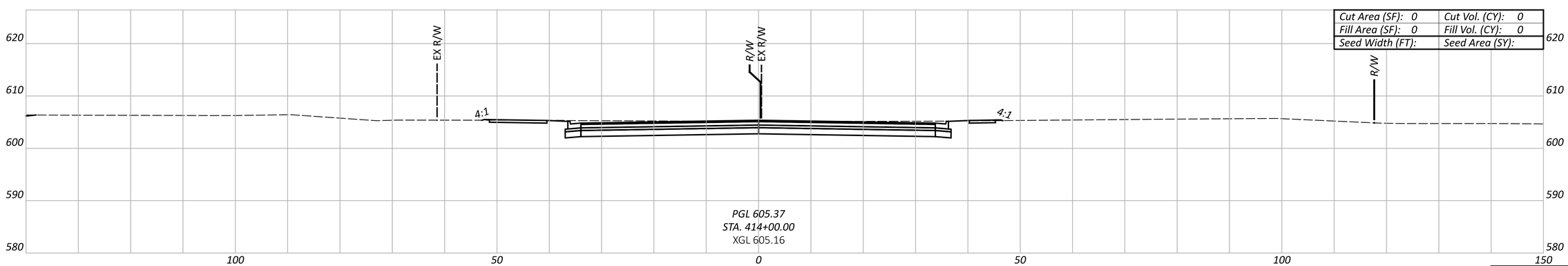

Cut Area (SF): 0	Cut Vol. (CY): 0
Fill Area (SF): 0	Fill Vol. (CY): 0
Seed Width (FT):	Seed Area (SY):

Sheet Totals		
Seeding	Cut	Fill

CROSS SECTIONS - ALTERNATIVE 4
SYMMES RD. - STA. 414+00 TO STA. 416+00

DESIGN AGENCY

HDR

DESIGNER
MJL

REVIEWER
PJD 02/21/25

PROJECT ID
SYMMES RD

SHEET P.90 TOTAL 115

BUT-SYMMES

MODEL: 00000_GX404 PAPERSIZE: 34x22 (in.) DATE: 3/31/2025 TIME: 2:12:00 PM USER: MLORENZ
pw:\\pwhdruseas01:HDR_US_East_01\Documents\Butler_County_Transportation_Improvement_District_-_Ohio\BCTID-SymmesRd_Grd_Separation\6.0_CAD_BIM\6.2_WIP\01_Design\000000\400-Engineering\Roadway\Sheets\Alt 4 Symmes Road Cross Sections

BUT-SYMMES

MODEL: 00000_GX405 PAPERSIZE: 34x22 (in.) DATE: 3/31/2025 TIME: 2:12:04 PM USER: MLORENZ
pw:\\pwhdruseas01:HDR_US_East_01\Documents\Butler_County_Transportation_Improvement_District_-_Ohio\BCTID-SymmesRd_Grd_Separation\6.0_CAD_BIM\6.2_WIP\01_Design\000000\400-Engineering\Roadway\Sheets\Alt 4 Symmes Road Cross Sections

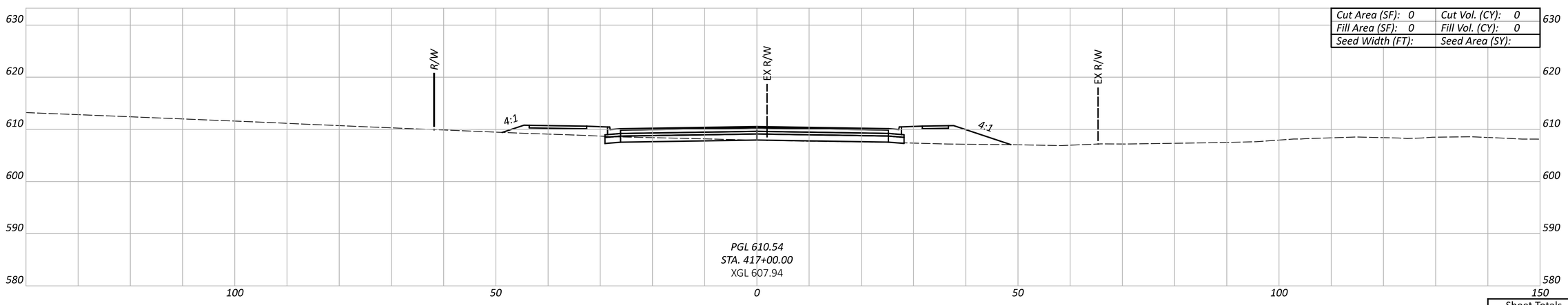

Cut Area (SF): 0	Cut Vol. (CY): 0
Fill Area (SF): 0	Fill Vol. (CY): 0
Seed Width (FT):	Seed Area (SY):

Sheet Totals		
Seeding	Cut	Fill

CROSS SECTIONS - ALTERNATIVE 4
SYMMES RD. - STA. 417+00

DESIGN AGENCY

HDR

DESIGNER
MJL

REVIEWER
PJD 02/21/25

PROJECT ID
SYMMES RD

SHEET P.91 TOTAL 115

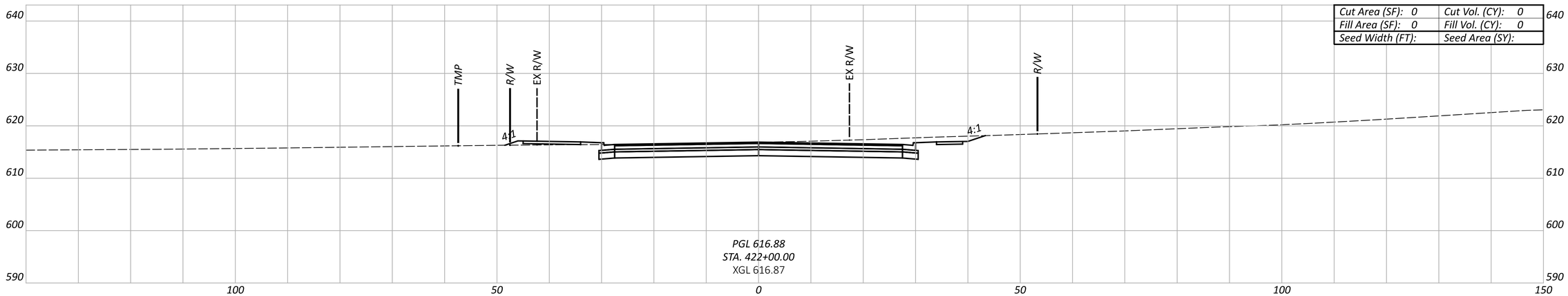

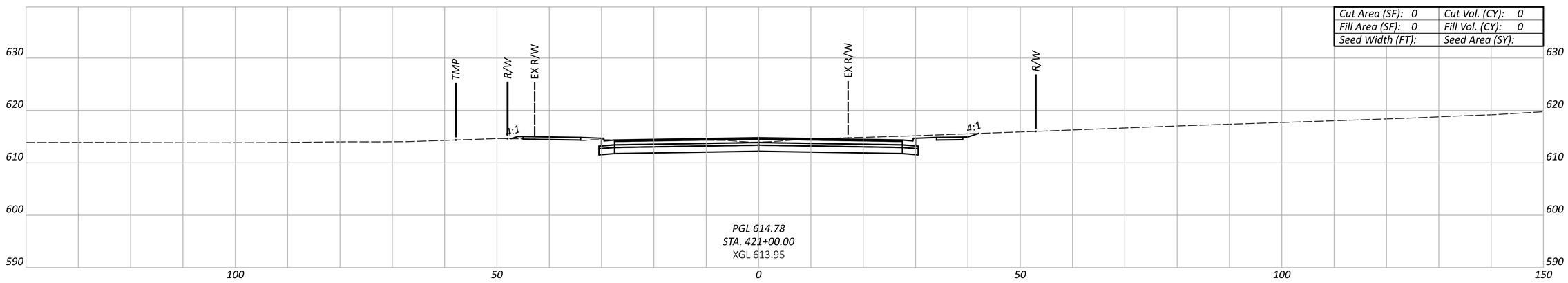

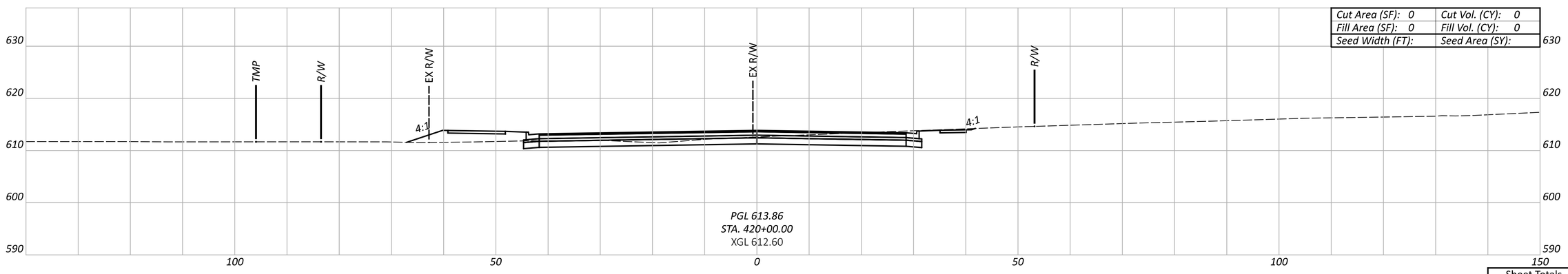

Sheet Totals		
Seeding	Cut	Fill

CROSS SECTIONS - ALTERNATIVE 4
SYMMES RD. - STA. 420+00 TO STA. 422+00

DESIGN AGENCY

HDR

DESIGNER
MJL

REVIEWER
PJD 02/21/25

PROJECT ID
SYMMES RD

SHEET P.92 TOTAL 115

BUT-SYMMES

MODEL: 00000_GX406 PAPERSIZE: 34x22 (in.) DATE: 3/31/2025 TIME: 2:12:06 PM USER: MLORENZ
pw:\\pwhdruseas01:HDR_US_East_01\Documents\Butler_County_Transportation_Improvement_District_-_Ohio\BCTID-SymmesRd_Grd_Separation\6.0_CAD_BIM\6.2_WIP\01_Design\000000\400-Engineering\Roadway\Sheets\Alt 4 Symmes Road Cross Sections

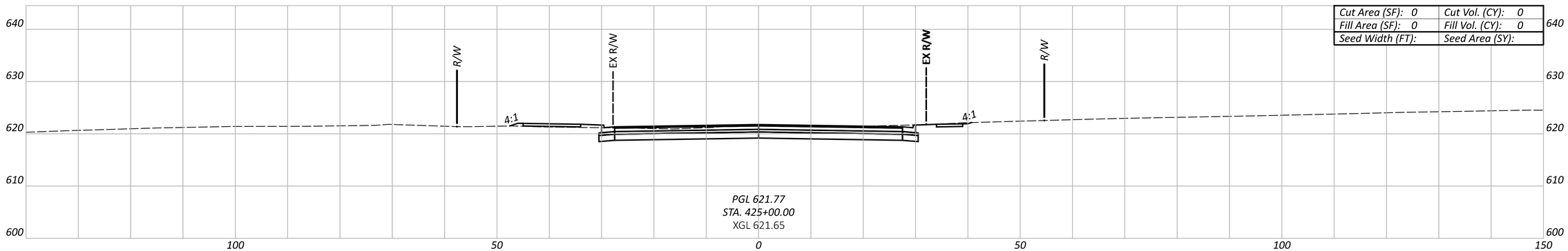

Cut Area (SF): 0	Cut Vol. (CY): 0
Fill Area (SF): 0	Fill Vol. (CY): 0
Seed Width (FT):	Seed Area (SY):

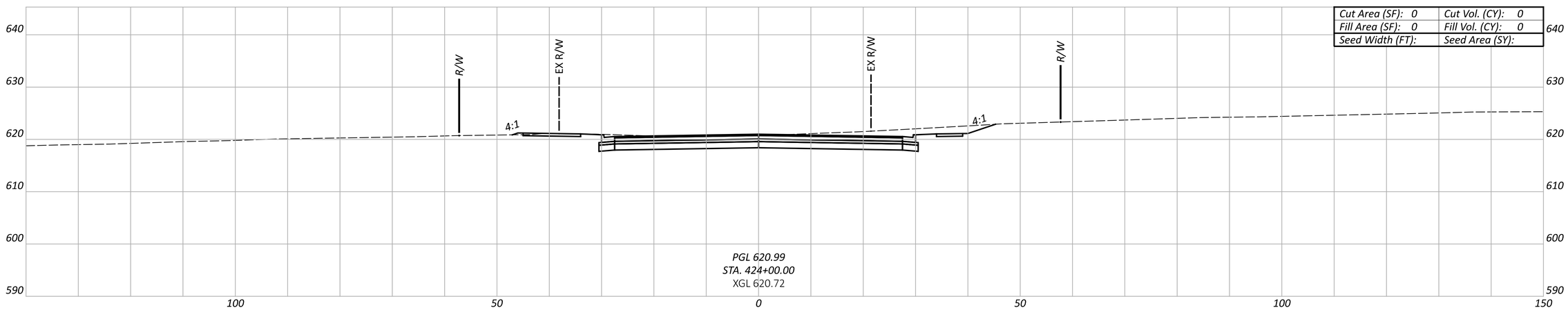

Cut Area (SF): 0	Cut Vol. (CY): 0
Fill Area (SF): 0	Fill Vol. (CY): 0
Seed Width (FT):	Seed Area (SY):

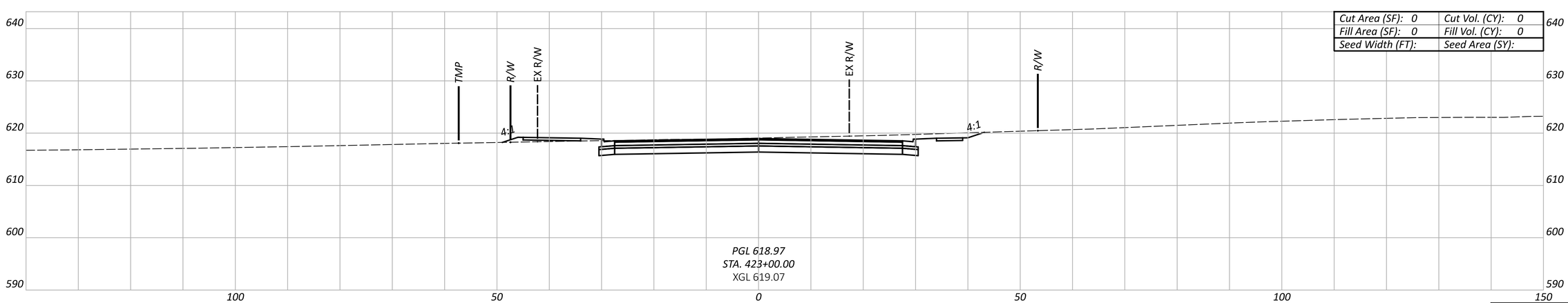

Cut Area (SF): 0	Cut Vol. (CY): 0
Fill Area (SF): 0	Fill Vol. (CY): 0
Seed Width (FT):	Seed Area (SY):

Sheet Totals		
Seeding	Cut	Fill

CROSS SECTIONS - ALTERNATIVE 4
SYMMES RD. - STA. 423+00 TO STA. 425+00

DESIGN AGENCY

HDR

DESIGNER
MJL

REVIEWER
PJD 02/21/25

PROJECT ID
SYMMES RD

SHEET P.93 TOTAL 115

BUT-SYMMES

MODEL: 00000_GX407 PAPERSIZE: 34x22 (in.) DATE: 3/31/2025 TIME: 2:12:10 PM USER: MLORENZ
pw:\\pwhdruseas01:HDR_US_East_01\Documents\Butler_County_Transportation_Improvement_District_-_Ohio\BCTID-SymmesRd_Grd_Separation\6.0_CAD_BIM\6.2_WIP\01_Design\000000\400-Engineering\Roadway\Sheets\Alt 4 Symmes Road Cross Sections

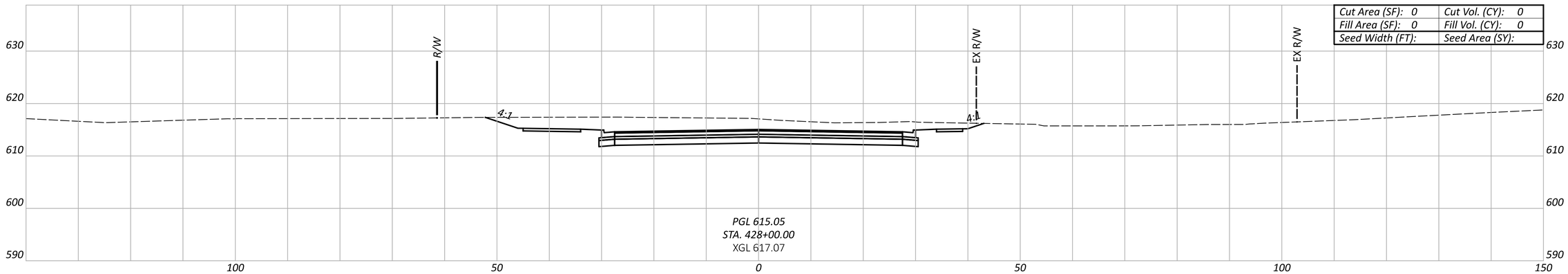

Cut Area (SF): 0	Cut Vol. (CY): 0
Fill Area (SF): 0	Fill Vol. (CY): 0
Seed Width (FT):	Seed Area (SY):

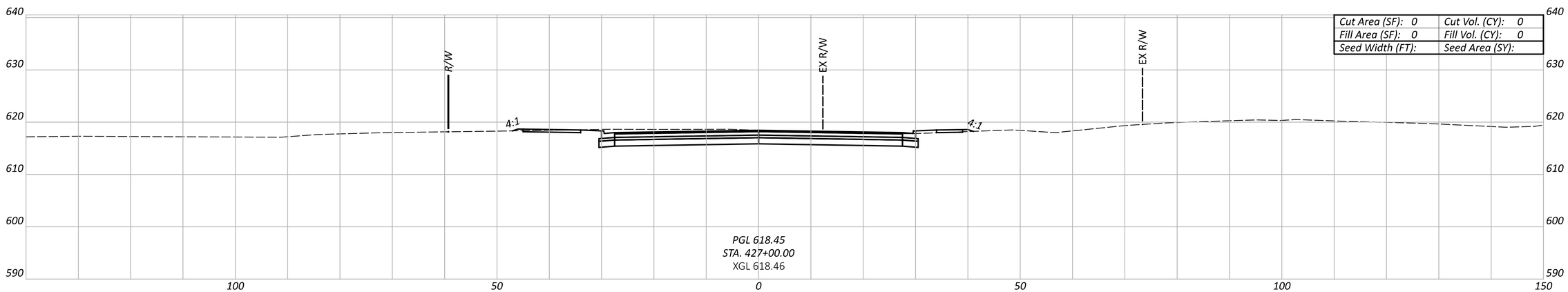

Cut Area (SF): 0	Cut Vol. (CY): 0
Fill Area (SF): 0	Fill Vol. (CY): 0
Seed Width (FT):	Seed Area (SY):

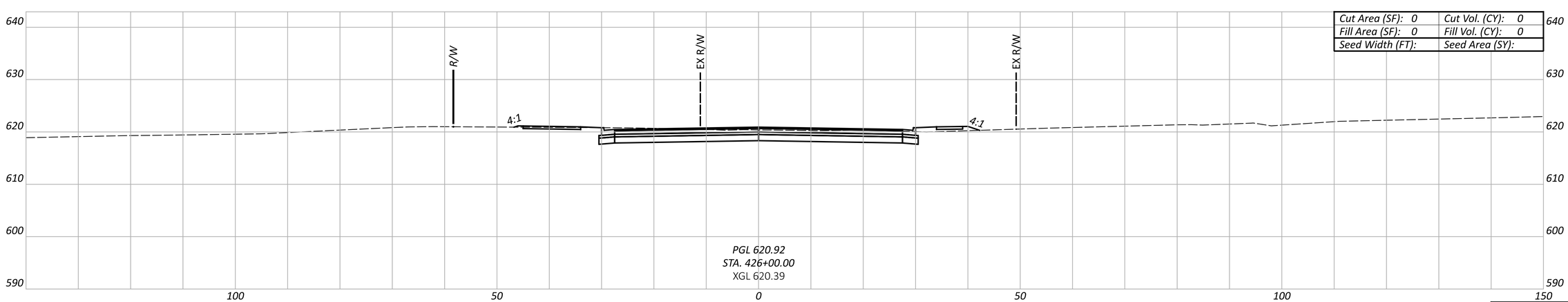

Cut Area (SF): 0	Cut Vol. (CY): 0
Fill Area (SF): 0	Fill Vol. (CY): 0
Seed Width (FT):	Seed Area (SY):

Sheet Totals		
Seeding	Cut	Fill

CROSS SECTIONS - ALTERNATIVE 4
SYMMES RD. - STA. 426+00 TO STA. 428+00

DESIGN AGENCY

HDR

DESIGNER
MJL

REVIEWER
PJD 02/21/25

PROJECT ID
SYMMES RD

SHEET P.94 TOTAL 115

BUT-SYMMES

MODEL: 00000_GX408 PAPERSIZE: 34x22 (in.) DATE: 3/31/2025 TIME: 2:12:13 PM USER: MLORENZ
pw:\\pwhdruseas01:HDR_US_East_01\Documents\Butler_County_Transportation_Improvement_District_-_Ohio\BCTID-SymmesRd_Grd_Separation\6.0_CAD_BIM\6.2_WIP\01_Design\000000\400-Engineering\Roadway\Sheets\Alt 4 Symmes Road Cross Sections

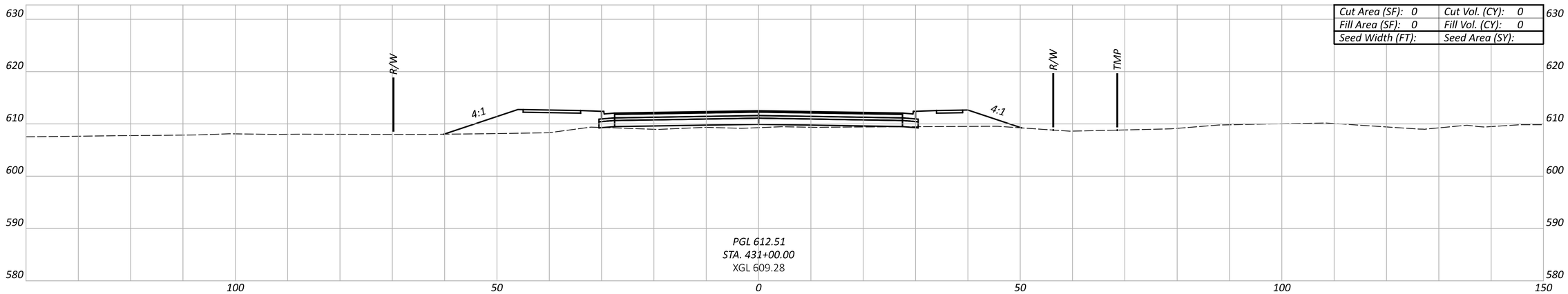

Cut Area (SF): 0	Cut Vol. (CY): 0
Fill Area (SF): 0	Fill Vol. (CY): 0
Seed Width (FT):	Seed Area (SY):

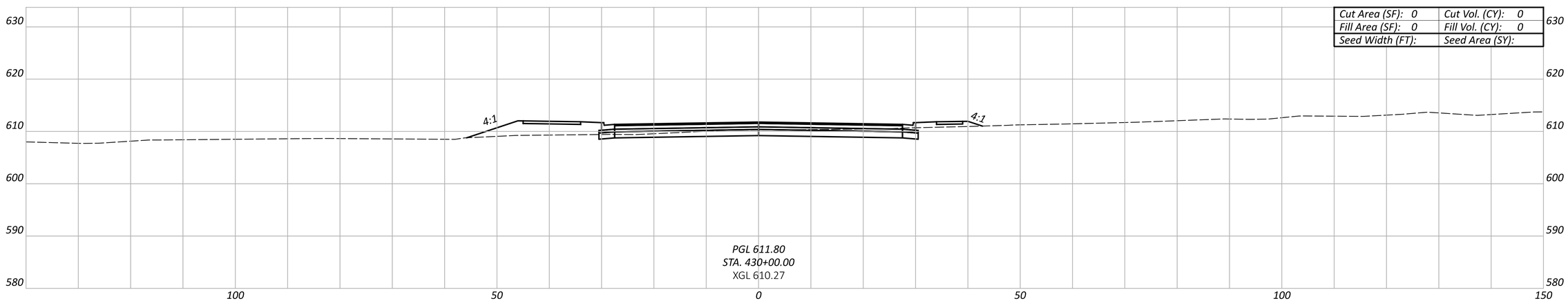

Cut Area (SF): 0	Cut Vol. (CY): 0
Fill Area (SF): 0	Fill Vol. (CY): 0
Seed Width (FT):	Seed Area (SY):

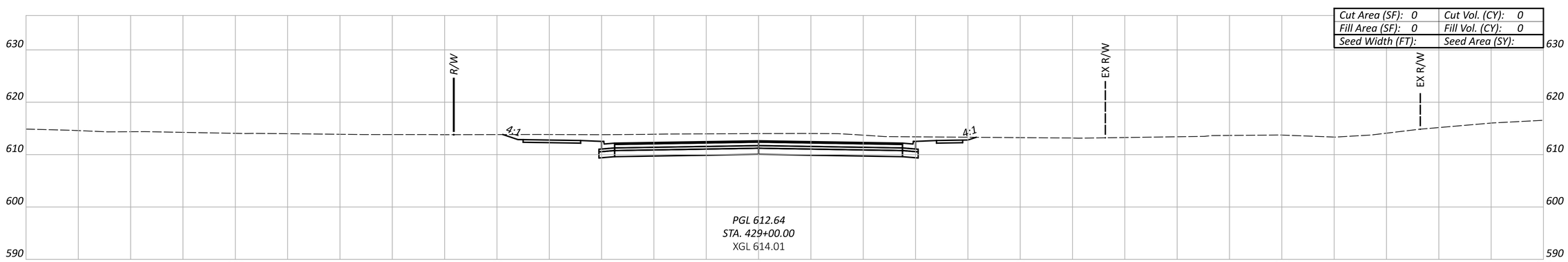

Cut Area (SF): 0	Cut Vol. (CY): 0
Fill Area (SF): 0	Fill Vol. (CY): 0
Seed Width (FT):	Seed Area (SY):

Sheet Totals		
Seeding	Cut	Fill

CROSS SECTIONS - ALTERNATIVE 4
SYMMES RD. - STA. 429+00 TO STA. 431+00

DESIGN AGENCY

HDR

DESIGNER
MJL

REVIEWER
PJD 02/21/25

PROJECT ID
SYMMES RD

SHEET P.95 TOTAL 115

BUT-SYMMES

MODEL: 00000_GX409 PAPERSIZE: 34x22 (in.) DATE: 3/31/2025 TIME: 2:12:17 PM USER: MLORENZ
pw:\\pwhdrusea01:HDR_US_East_01\Documents\Butler_County_Transportation_Improvement_District_-_Ohio\BCTID-SymmesRd_Grd_Separation\6.0_CAD_BIM\6.2_WIP\01_Design\000000\400-Engineering\Roadway\Sheets\Alt 4 Symmes Road Cross Sections

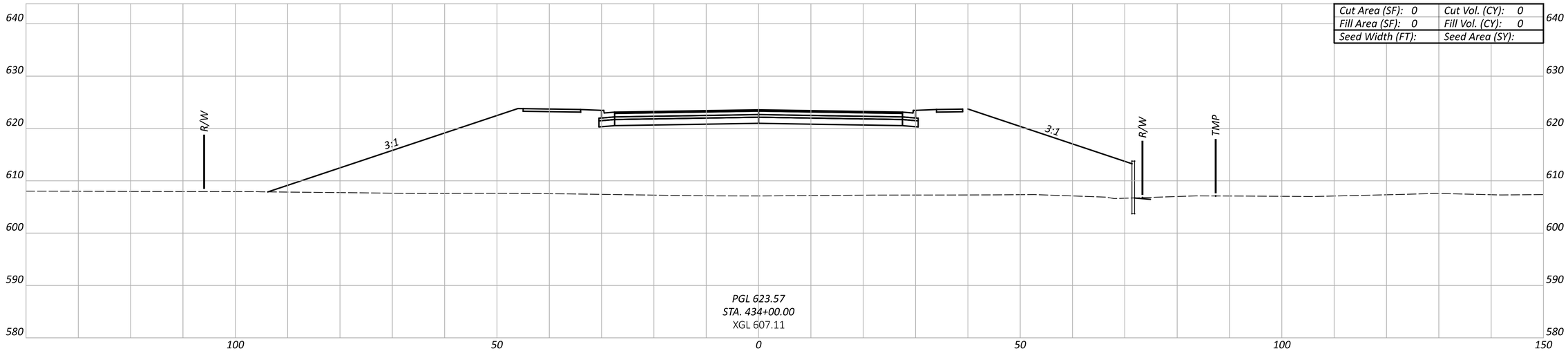

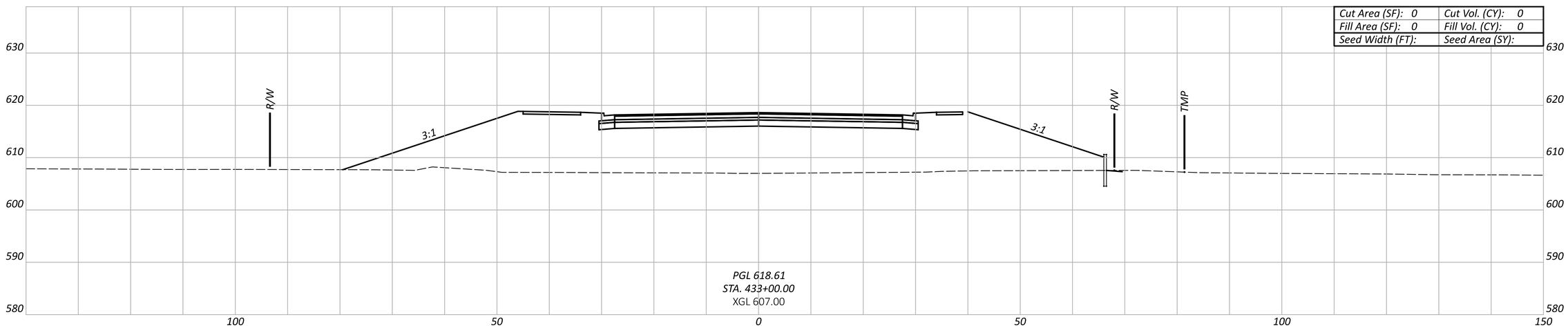

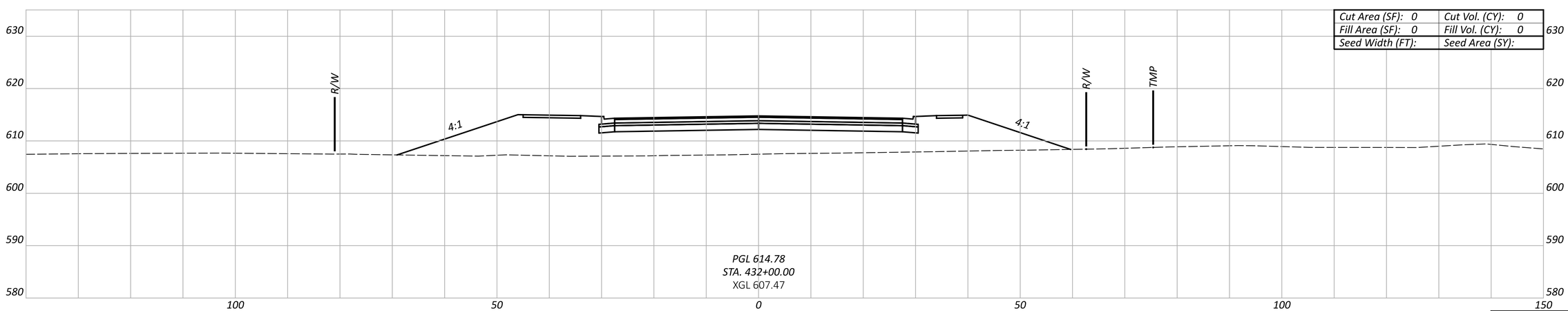

Sheet Totals		
Seeding	Cut	Fill

CROSS SECTIONS - ALTERNATIVE 4
SYMMES RD. - STA. 432+00 TO STA. 434+00

DESIGN AGENCY

HDR

DESIGNER
MJL

REVIEWER
PJD 02/21/25

PROJECT ID
SYMMES RD

SHEET P.96 TOTAL 115

BUT-SYMMES

MODEL: 00000_GX410 PAPERSIZE: 34x22 (in.) DATE: 3/31/2025 TIME: 2:12:21 PM USER: MLORENZ
pw:\\pwhdruseas01:HDR_US_East_01\Documents\Butler_County_Transportation_Improvement_District_-_Ohio\BCTID-SymmesRd_Grd_Separation\6.0_CAD_BIM\6.2_WIP\01_Design\000000\400-Engineering\Roadway\Sheets\Alt 4 Symmes Road Cross Sections

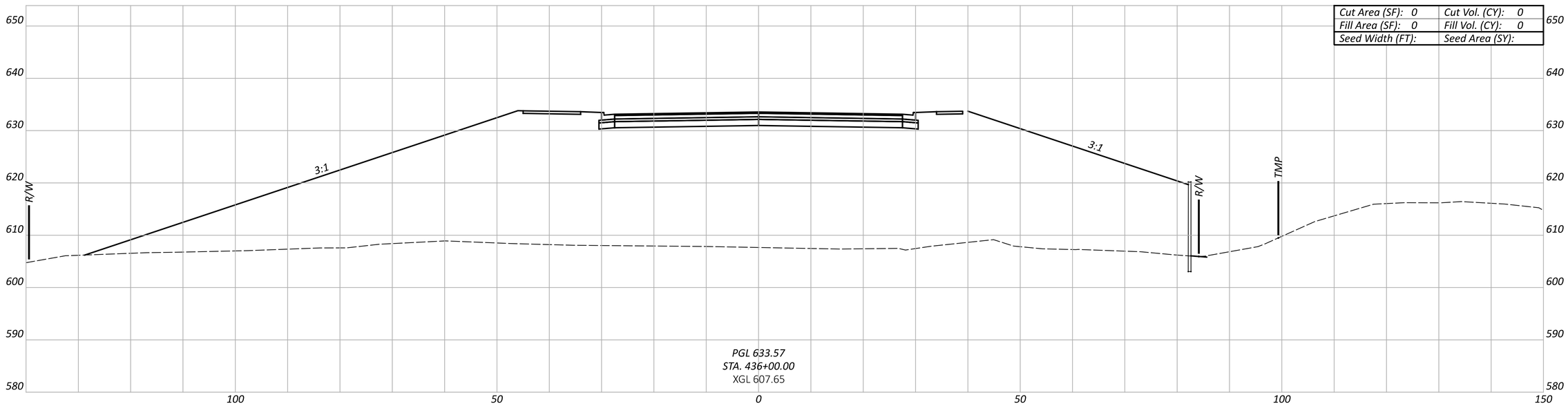

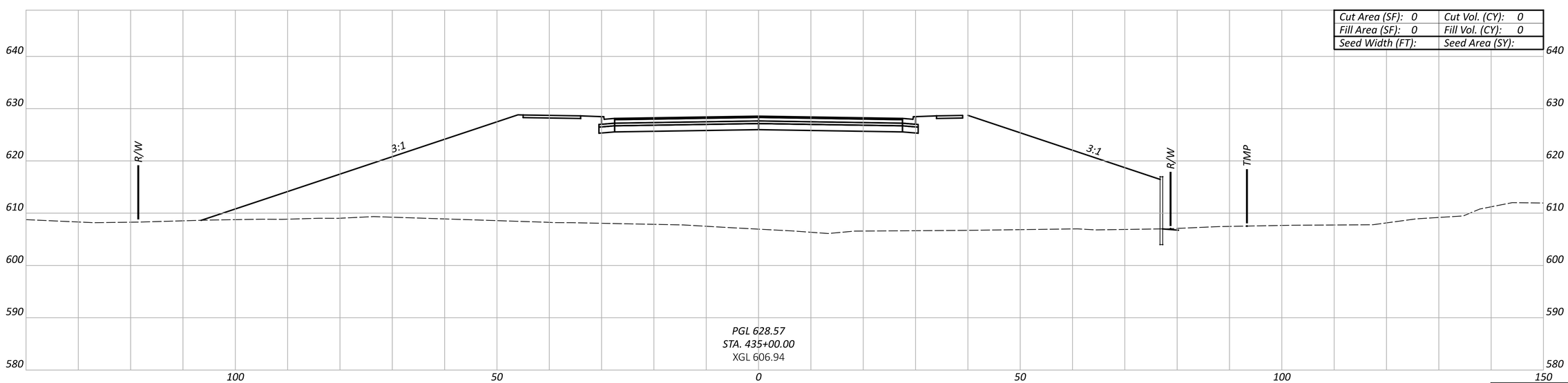

Sheet Totals		
Seeding	Cut	Fill

CROSS SECTIONS - ALTERNATIVE 4
SYMMES RD. - STA. 435+00 TO STA. 436+00

DESIGN AGENCY

HDR

DESIGNER
MJL

REVIEWER
PJD 02/21/25

PROJECT ID
SYMMES RD

SHEET P.97 TOTAL 115

BUT-SYMMES

MODEL: 00000_GX411 PAPERSIZE: 34x22 (in.) DATE: 3/31/2025 TIME: 2:12:25 PM USER: MLORENZ
pw:\\pwhdruseas01:HDR_US_East_01\Documents\Butler_County_Transportation_Improvement_District_-_Ohio\BCTID-SymmesRd_Grd_Separation\6.0_CAD_BIM\6.2_WIP\01_Design\000000\400-Engineering\Roadway\Sheets\Alt 4 Symmes Road Cross Sections

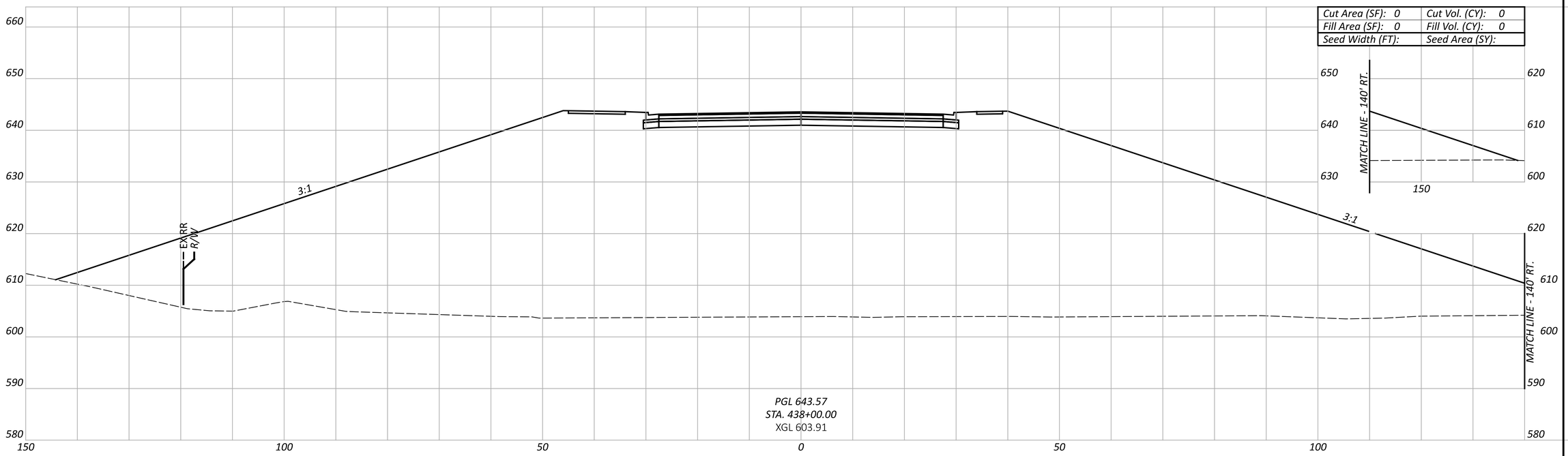

Cut Area (SF): 0	Cut Vol. (CY): 0
Fill Area (SF): 0	Fill Vol. (CY): 0
Seed Width (FT):	Seed Area (SY):

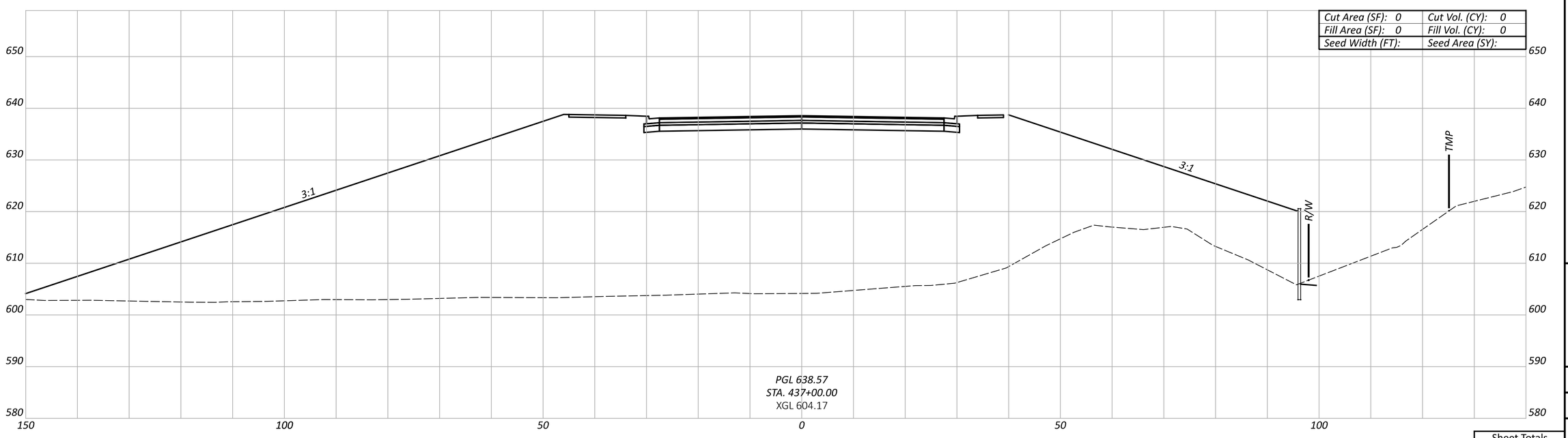

Cut Area (SF): 0	Cut Vol. (CY): 0
Fill Area (SF): 0	Fill Vol. (CY): 0
Seed Width (FT):	Seed Area (SY):

Sheet Totals		
Seeding	Cut	Fill

CROSS SECTIONS - ALTERNATIVE 4
SYMMES RD. - STA. 437+00 TO STA. 438+00

DESIGN AGENCY

HDR

DESIGNER
MJL

REVIEWER
PJD 02/21/25

PROJECT ID
SYMMES RD

SHEET P.98 TOTAL 115

BUT-SYMMES

MODEL: 00000_GX412 PAPERSIZE: 34x22 (in.) DATE: 3/31/2025 TIME: 2:12:28 PM USER: MLORENZ
pw:\\pwhdruseas01:HDR_US_East_01\Documents\Butler_County_Transportation_Improvement_District_-_Ohio\BCTID-SymmesRd_Grd_Separation\6.0_CAD_BIM\6.2_WIP\01_Design\000000\400-Engineering\Roadway\Sheets\Alt 4 Symmes Road Cross Sections

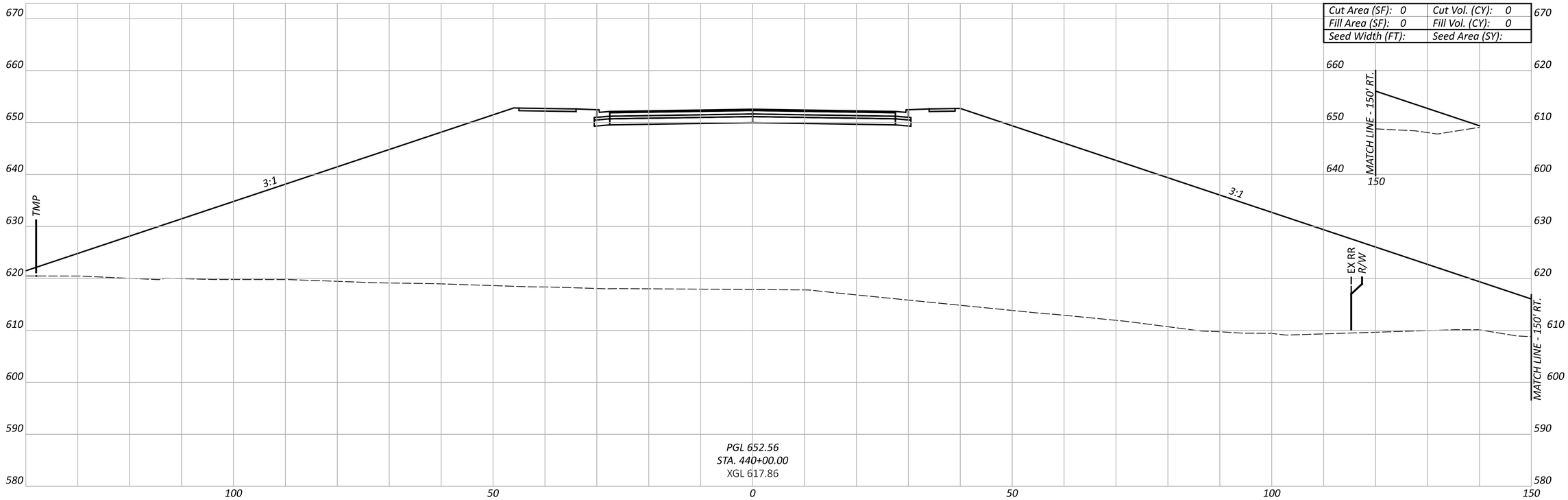

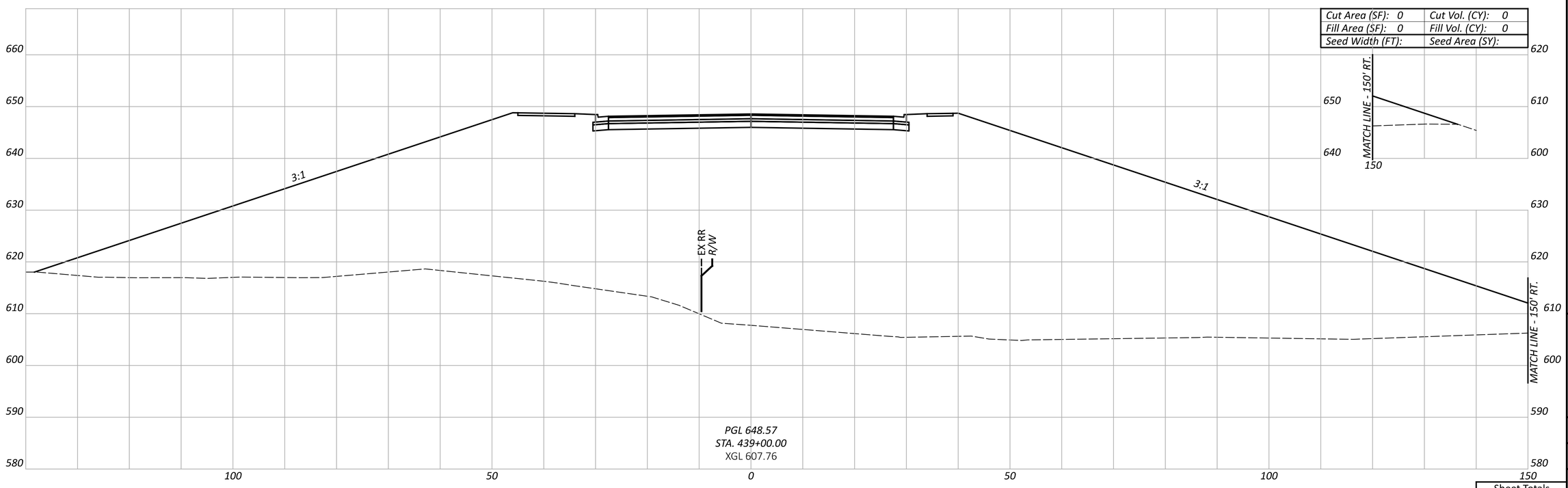

Sheet Totals		
Seeding	Cut	Fill

CROSS SECTIONS - ALTERNATIVE 4
SYMMES RD. - STA. 439+00 TO STA. 440+00

DESIGN AGENCY

HDR

DESIGNER: MJL

REVIEWER: PJD 02/21/25

PROJECT ID: SYMMES RD

SHEET: P.99 TOTAL: 115

BUT-SYMMES

MODEL: 00000_GX413 PAPERSIZE: 34x22 (in.) DATE: 3/31/2025 TIME: 2:12:31 PM USER: MLORENZ
pw:\\pwhdruseas01:HDR_US_East_01\Documents\Butler_County_Transportation_Improvement_District_-_Ohio\BCTID-SymmesRd_Grd_Separation\6.0_CAD_BIM\6.2_WIP\01_Design\000000\400-Engineering\Roadway\Sheets\Alt 4 Symmes Road Cross Sections

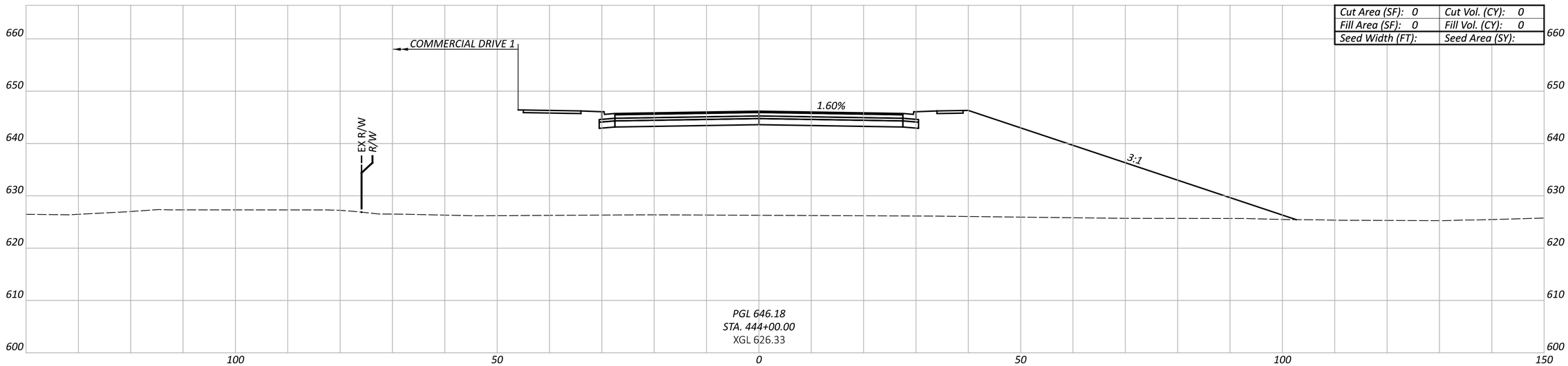

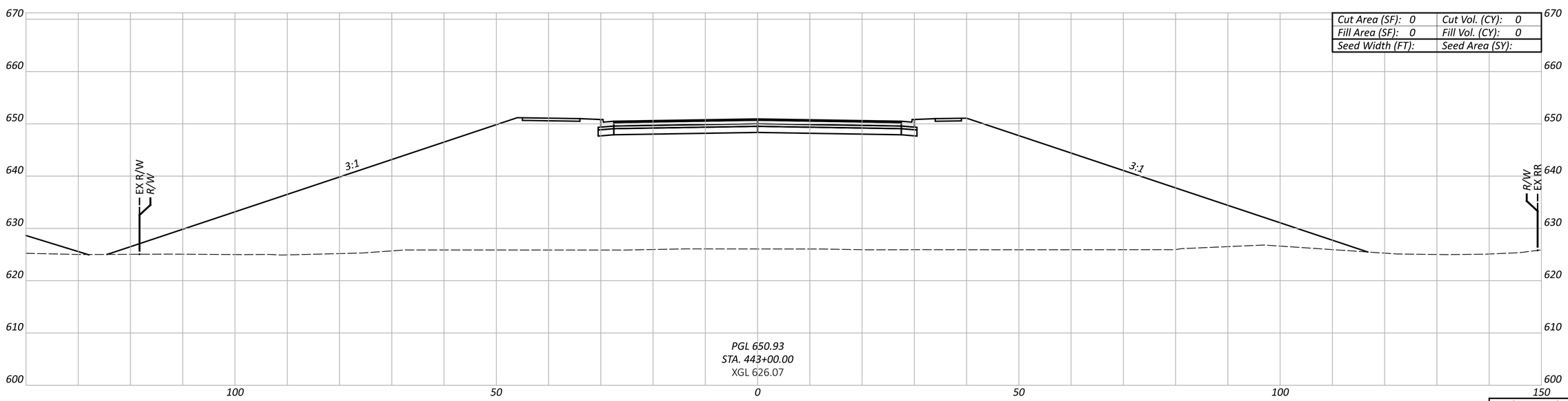

Sheet Totals		
Seeding	Cut	Fill

CROSS SECTIONS - ALTERNATIVE 4
SYMMES RD. - STA. 443+00 TO STA. 444+00

DESIGN AGENCY

HDR

DESIGNER
MJL

REVIEWER
PJD 02/21/25

PROJECT ID
SYMMES RD

SHEET P.100 TOTAL 115

BUT-SYMMES

MODEL: 00000_GX414 PAPERSIZE: 34x22 (in.) DATE: 3/31/2025 TIME: 2:12:35 PM USER: MLORENZ
pw:\\pwhdruseas01:HDR_US_East_01\Documents\Butler_County_Transportation_Improvement_District_-_Ohio\BCTID-SymmesRd_Grd_Separation\6.0_CAD_BIM\6.2_WIP\01_Design\000000\400-Engineering\Roadway\Sheets\Alt 4 Symmes Road Cross Sections

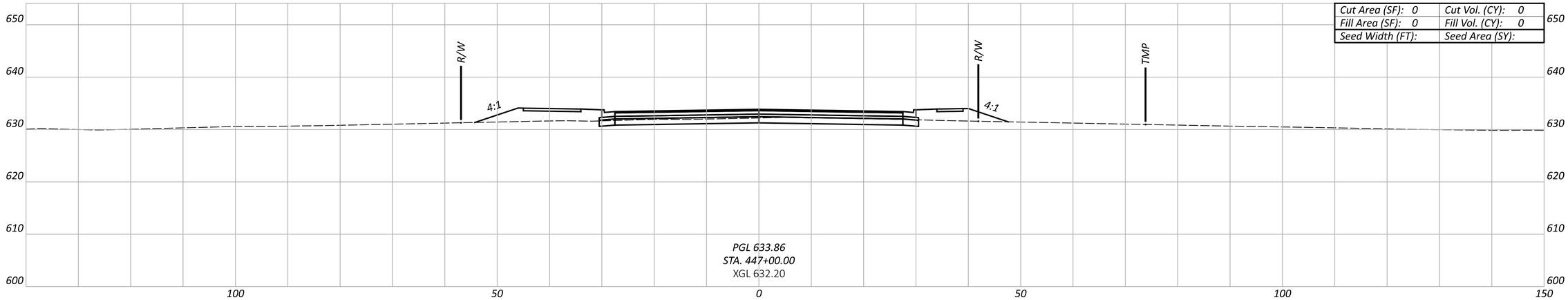

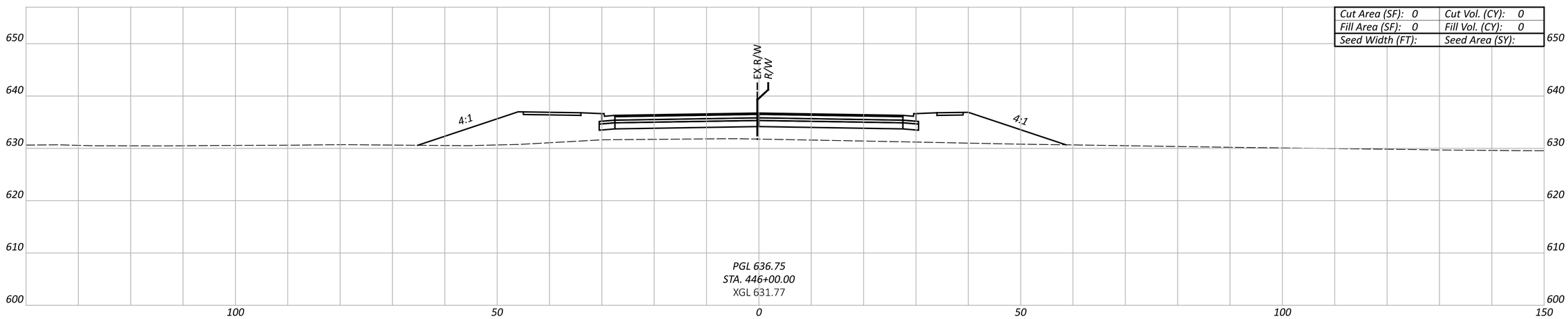

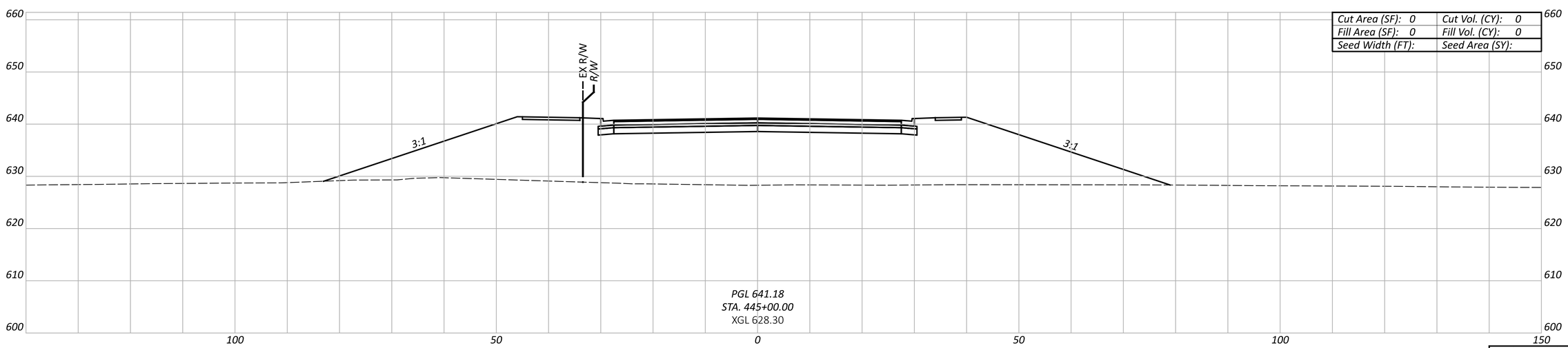

Sheet Totals		
Seeding	Cut	Fill

CROSS SECTIONS - ALTERNATIVE 4
SYMMES RD. - STA. 445+00 TO STA. 447+00

DESIGN AGENCY

HDR

DESIGNER
MJL

REVIEWER
PJD 02/21/25

PROJECT ID
SYMMES RD

SHEET P.101 TOTAL 115

BUT-SYMMES

MODEL: 00000_GX415 PAPERSIZE: 34x22 (in.) DATE: 3/31/2025 TIME: 2:12:38 PM USER: MLORENZ
pw:\\pwhdruseas01:HDR_US_East_01\Documents\Butler_County_Transportation_Improvement_District_-_Ohio\BCTID-SymmesRd_Grd_Separation\6.0_CAD_BIM\6.2_WIP\01_Design\000000\400-Engineering\Roadway\Sheets\Alt 4 Symmes Road Cross Sections

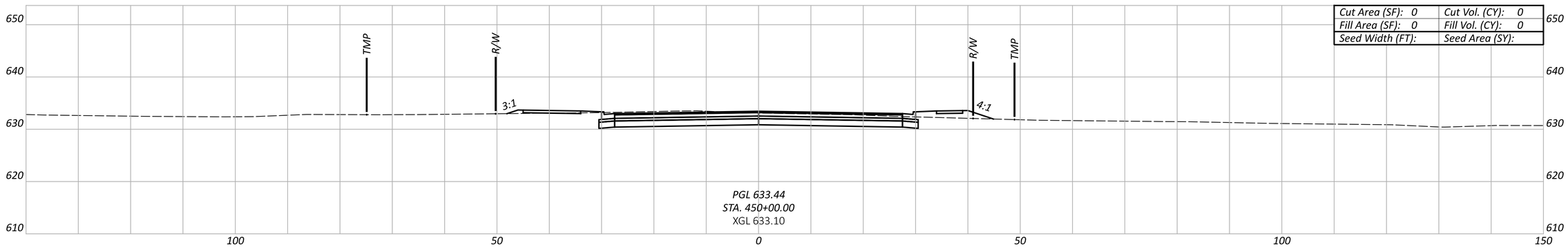

Cut Area (SF): 0	Cut Vol. (CY): 0
Fill Area (SF): 0	Fill Vol. (CY): 0
Seed Width (FT):	Seed Area (SY):

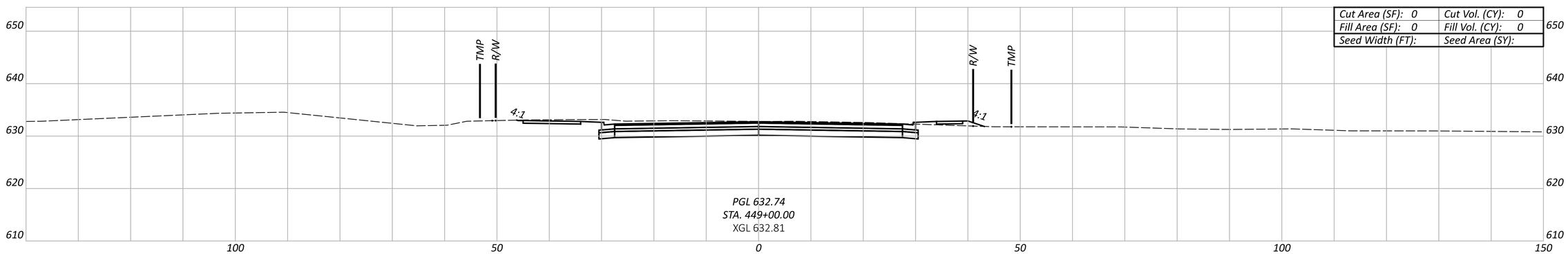

Cut Area (SF): 0	Cut Vol. (CY): 0
Fill Area (SF): 0	Fill Vol. (CY): 0
Seed Width (FT):	Seed Area (SY):

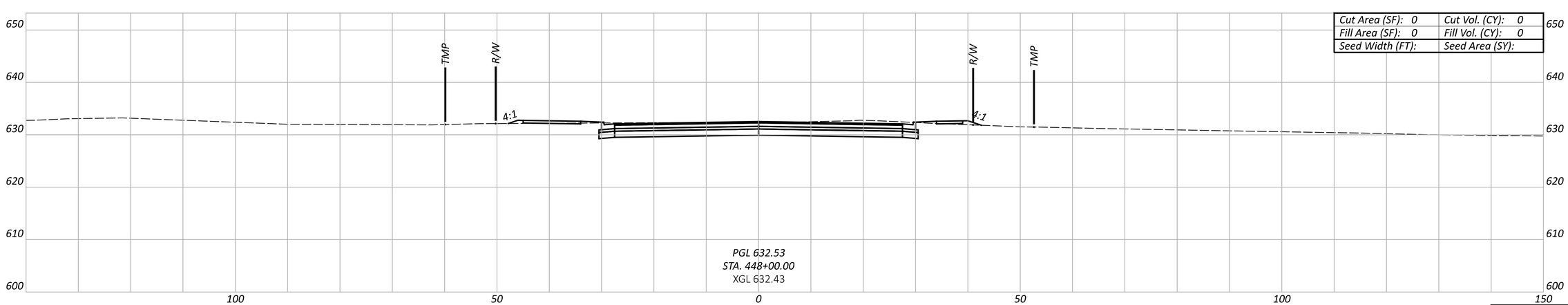

Cut Area (SF): 0	Cut Vol. (CY): 0
Fill Area (SF): 0	Fill Vol. (CY): 0
Seed Width (FT):	Seed Area (SY):

Sheet Totals		
Seeding	Cut	Fill

CROSS SECTIONS - ALTERNATIVE 4
SYMMES RD. - STA. 448+00 TO STA. 450+00

DESIGN AGENCY

HDR

DESIGNER
MJL

REVIEWER
PJD 02/21/25

PROJECT ID
SYMMES RD

SHEET P.102 TOTAL 115

BUT-SYMMES

MODEL: 00000_GX416 PAPERSIZE: 34x22 (in.) DATE: 3/31/2025 TIME: 2:12:41 PM USER: MLORENZ
pw:\\pwhdruseas01:HDR_US_East_01\Documents\Butler_County_Transportation_Improvement_District_-_Ohio\BCTID-SymmesRd_Grd_Separation\6.0_CAD_BIM\6.2_WIP\01_Design\000000\400-Engineering\Roadway\Sheets\Alt 4 Symmes Road Cross Sections

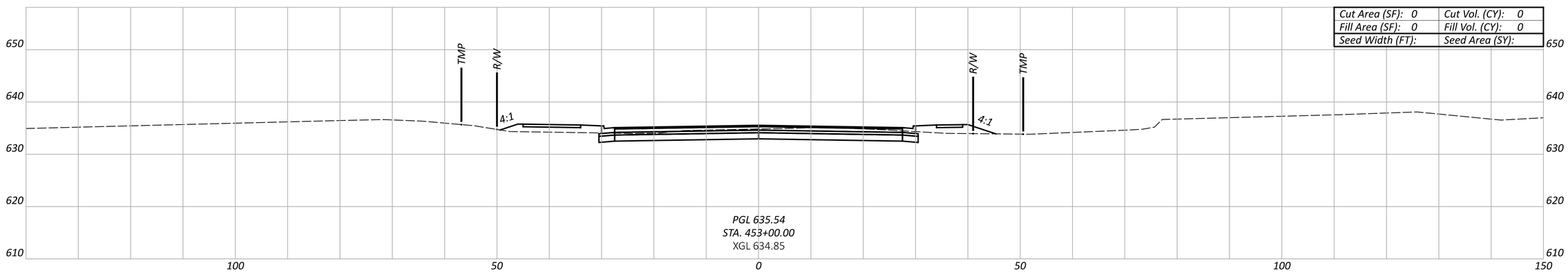

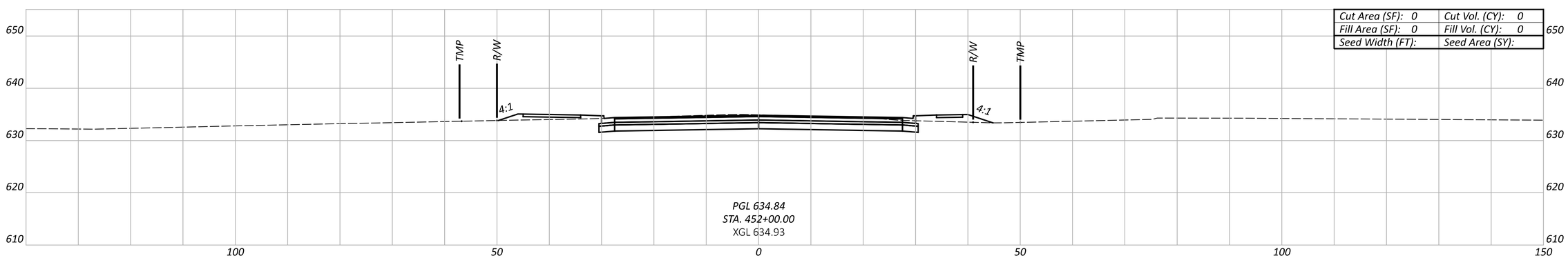

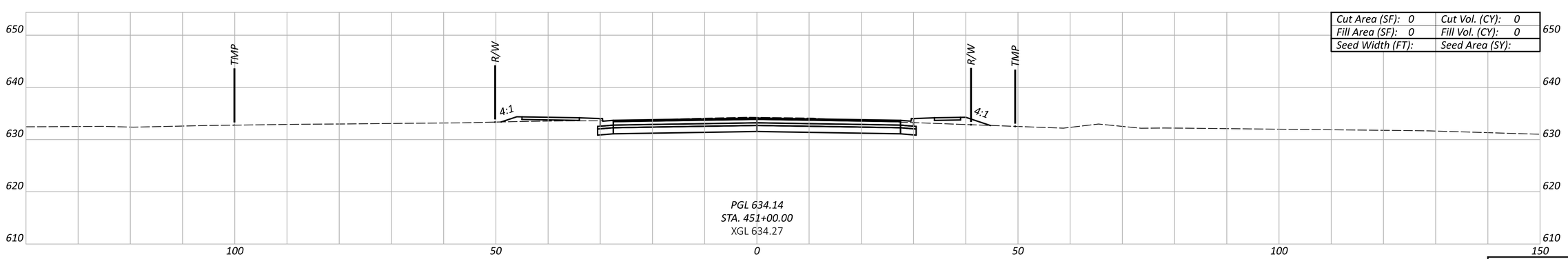

Sheet Totals		
Seeding	Cut	Fill

CROSS SECTIONS - ALTERNATIVE 4
SYMMES RD. - STA. 451+00 TO STA. 453+00

DESIGN AGENCY

HDR

DESIGNER
MJL

REVIEWER
PJD 02/21/25

PROJECT ID
SYMMES RD

SHEET P.103 TOTAL 115

BUT-SYMMES

MODEL: 00000_GX417 PAPERSIZE: 34x22 (in.) DATE: 3/31/2025 TIME: 2:12:45 PM USER: MLORENZ
pw:\\pwhdruseas01:HDR_US_East_01\Documents\Butler_County_Transportation_Improvement_District_-_Ohio\BCTID-SymmesRd_Grd_Separation\6.0_CAD_BIM\6.2_WIP\01_Design\000000\400-Engineering\Roadway\Sheets\Alt 4 Symmes Road Cross Sections

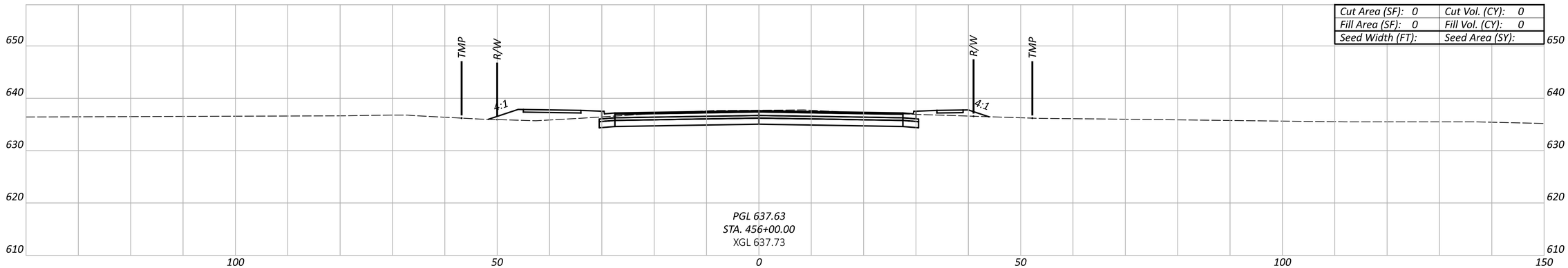

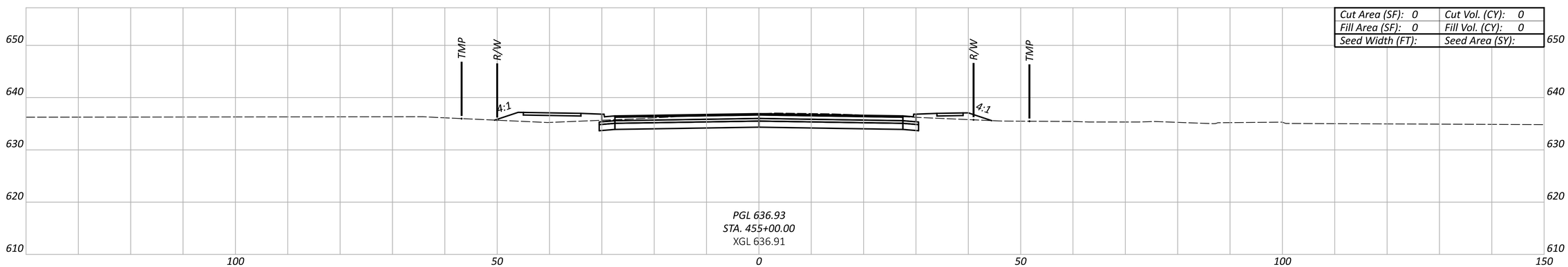

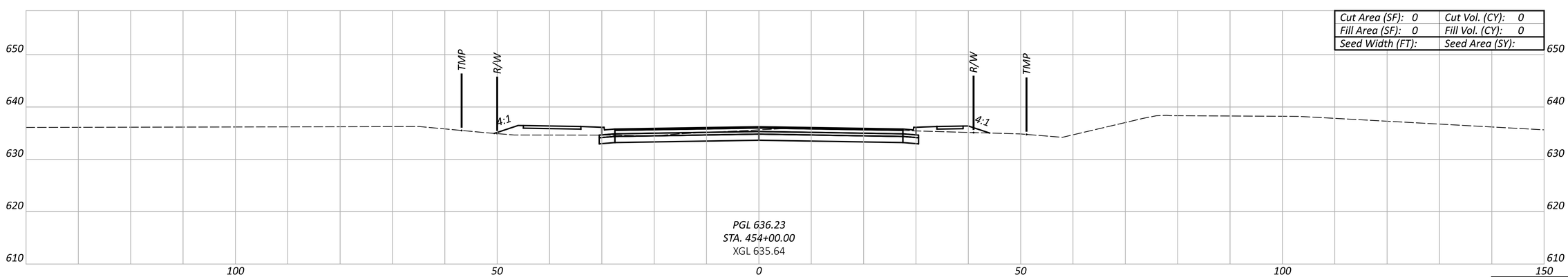

Sheet Totals		
Seeding	Cut	Fill

CROSS SECTIONS - ALTERNATIVE 4
SYMMES RD. - STA. 454+00 TO STA. 456+00

DESIGN AGENCY

HDR

DESIGNER
MJL

REVIEWER
PJD 02/21/25

PROJECT ID
SYMMES RD

SHEET P.104 TOTAL 115

BUT-SYMMES

MODEL: 00000_GX418 PAPERSIZE: 34x22 (in.) DATE: 3/31/2025 TIME: 2:12:49 PM USER: MLORENZ
pw:\\pwhdruseas01:HDR_US_East_01\Documents\Butler_County_Transportation_Improvement_District_-_Ohio\BCTID-SymmesRd_Grd_Separation\6.0_CAD_BIM\6.2_WIP\01_Design\000000\400-Engineering\Roadway\Sheets\Alt 4 Symmes Road Cross Sections

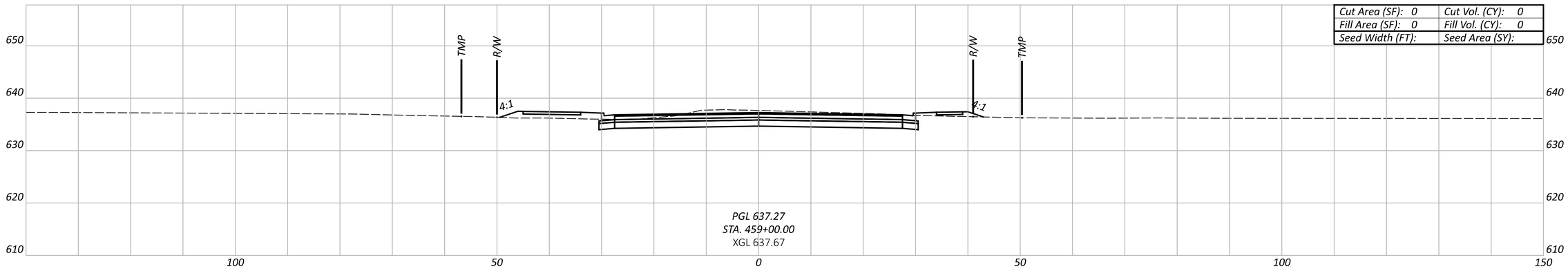

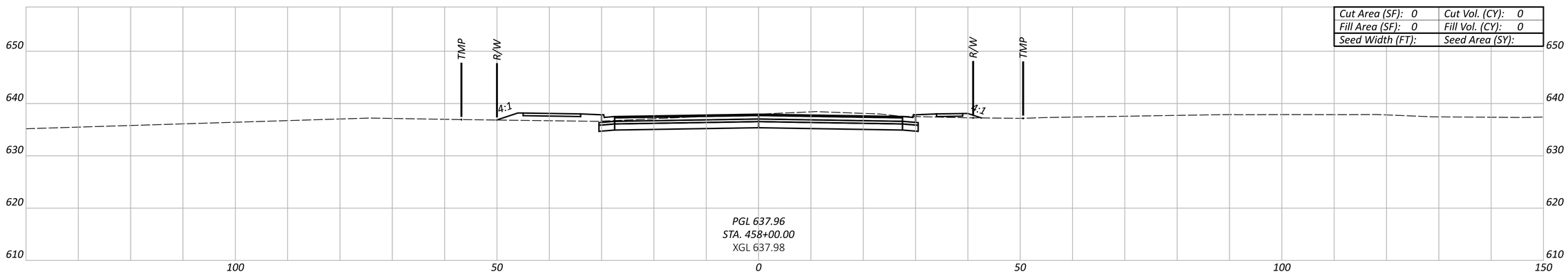

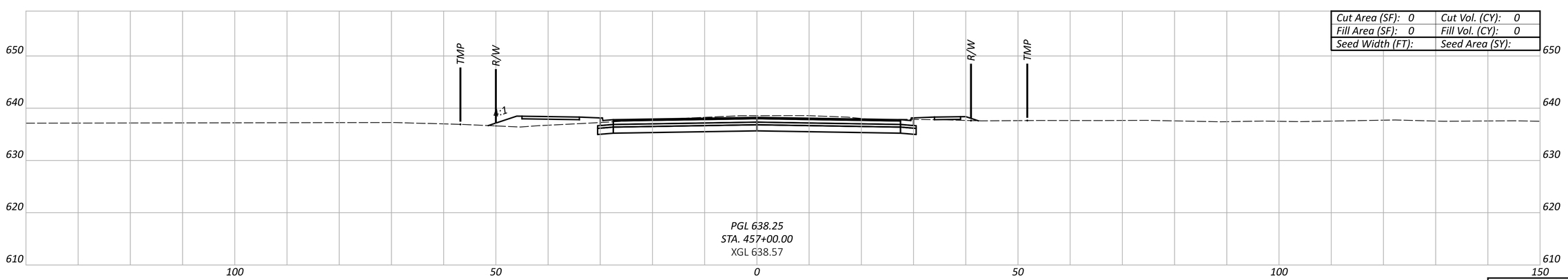

Sheet Totals		
Seeding	Cut	Fill

CROSS SECTIONS - ALTERNATIVE 4
SYMMES RD. - STA. 457+00 TO STA. 459+00

DESIGN AGENCY

HDR

DESIGNER
MJL

REVIEWER
PJD 02/21/25

PROJECT ID
SYMMES RD

SHEET P.105 TOTAL 115

BUT-SYMMES

MODEL: 00000_GX419 PAPERSIZE: 34x22 (in.) DATE: 3/31/2025 TIME: 2:12:53 PM USER: MLORENZ
pw:\\pwhdruseas01:HDR_US_East_01\Documents\Butler_County_Transportation_Improvement_District_-_Ohio\BCTID-SymmesRd_Grd_Separation\6.0_CAD_BIM\6.2_WIP\01_Design\000000\400-Engineering\Roadway\Sheets\Alt 4 Symmes Road Cross Sections

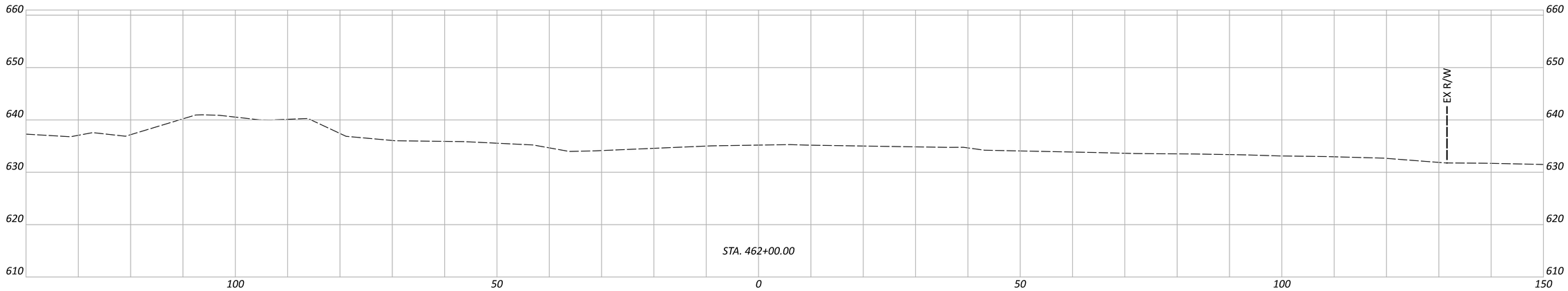

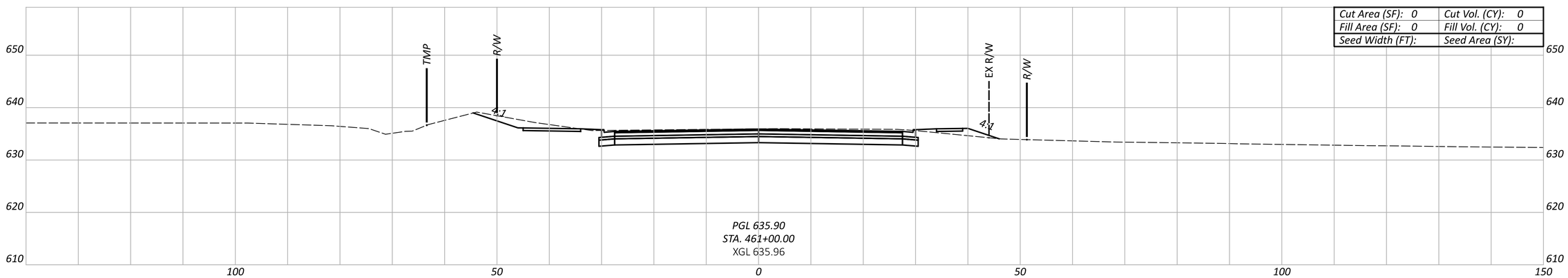

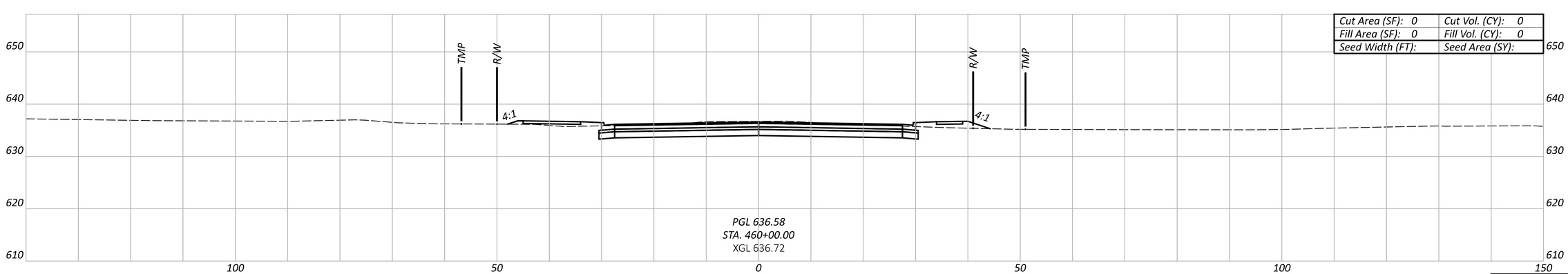

Sheet Totals		
Seeding	Cut	Fill

CROSS SECTIONS - ALTERNATIVE 4
SYMMES RD. - STA. 460+00 TO STA. 462+00

DESIGN AGENCY

HDR

DESIGNER
MJL

REVIEWER
PJD 02/21/25

PROJECT ID
SYMMES RD

SHEET P.106 TOTAL 115

BUT-SYMMES

MODEL: 00000_GX420 PAPERSIZE: 34x22 (in.) DATE: 3/31/2025 TIME: 2:12:57 PM USER: MLORENZ
pw:\\pwhdruseas01:HDR_US_East_01\Documents\Butler_County_Transportation_Improvement_District_-_Ohio\BCTID-SymmesRd_Grd_Separation\6.0_CAD_BIM\6.2_WIP\01_Design\000000\400-Engineering\Roadway\Sheets\Alt 4 Symmes Road Cross Sections

BUT-SYMMES

MODEL: 00000_GX421 PAPERSIZE: 34x22 (in.) DATE: 3/31/2025 TIME: 2:13:00 PM USER: MLORENZ
pw:\\pwhdruseas01:HDR_US_East_01\Documents\Butler_County_Transportation_Improvement_District_-_Ohio\BCTID-SymmesRd_Grd_Separation\6.0_CAD_BIM\6.2_WIP\01_Design\000000\400-Engineering\Roadway\Sheets\Alt 4 Symmes Road Cross Sections

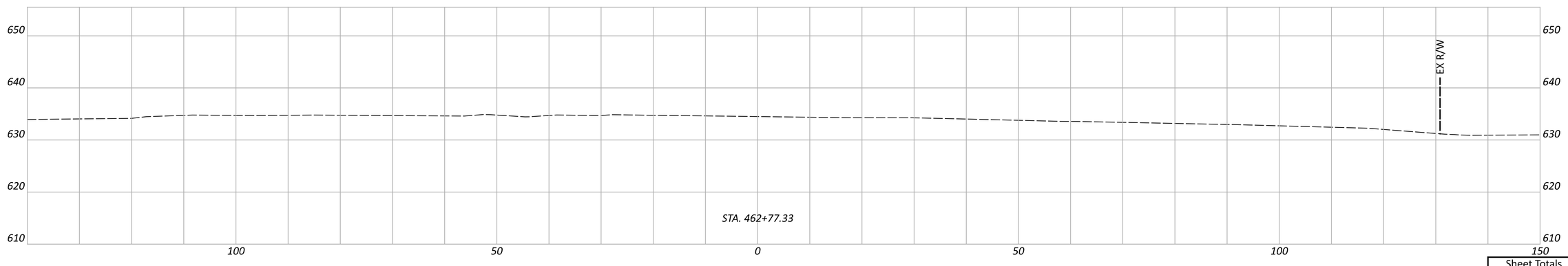

Sheet Totals		
Seeding	Cut	Fill

CROSS SECTIONS - ALTERNATIVE 4
SYMMES RD. - STA. 462+77.33

DESIGN AGENCY

HDR

DESIGNER
MJL

REVIEWER
PJD 02/21/25

PROJECT ID
SYMMES RD

SHEET P.107 TOTAL 115

CROSS SECTIONS - ALTERNATIVE 4
OLD SYMMES RD. - STA. 1+00 TO STA. 2+00

Cut Area (SF): 0	Cut Vol. (CY): 0
Fill Area (SF): 0	Fill Vol. (CY): 0
Seed Width (FT):	Seed Area (SY):

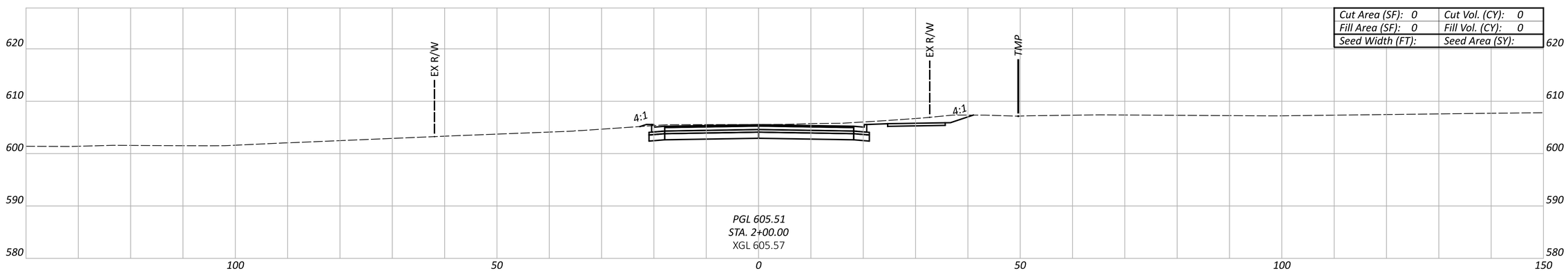

Cut Area (SF): 0	Cut Vol. (CY): 0
Fill Area (SF): 0	Fill Vol. (CY): 0
Seed Width (FT):	Seed Area (SY):

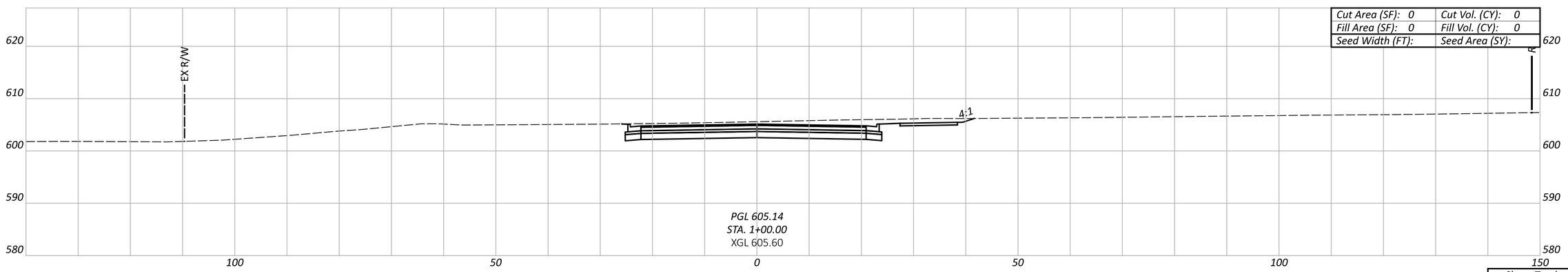

Sheet Totals		
Seeding	Cut	Fill

DESIGN AGENCY

HDR

DESIGNER
MJL

REVIEWER
PJD 02/21/25

PROJECT ID
SYMMES RD

SHEET P.108 TOTAL 115

BUT-SYMMES

MODEL: 00000_GX422 PAPERSIZE: 34x22 (in.) DATE: 3/31/2025 TIME: 2:13:01 PM USER: MLORENZ
pw:\\pwhdruseas01:HDR_US_East_01\Documents\Butler_County_Transportation_Improvement_District_-_Ohio\BCTID-SymmesRd_Grd_Separation\6.0_CAD_BIM\6.2_WIP\01_Design\000000\400-Engineering\Roadway\Sheets\Alt 4 Symmes Road Cross Sections

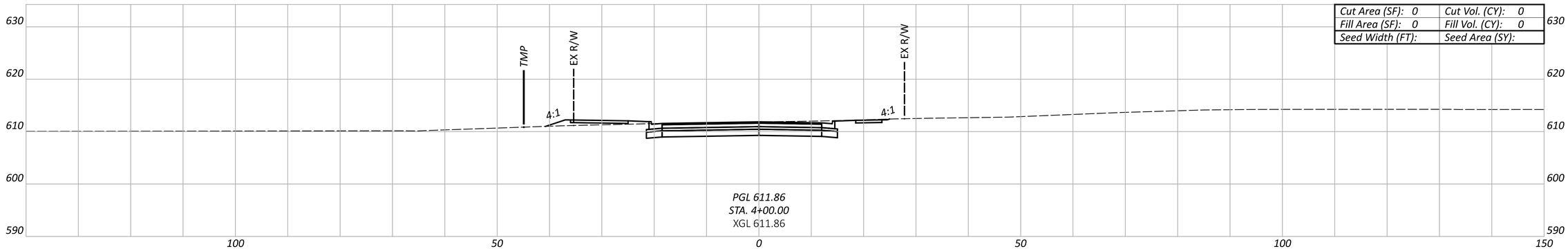

Cut Area (SF): 0	Cut Vol. (CY): 0
Fill Area (SF): 0	Fill Vol. (CY): 0
Seed Width (FT):	Seed Area (SY):

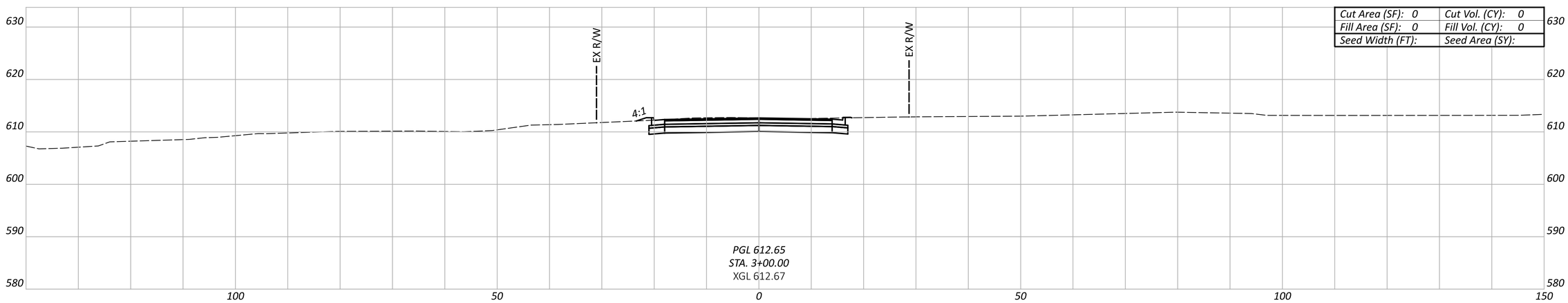

Cut Area (SF): 0	Cut Vol. (CY): 0
Fill Area (SF): 0	Fill Vol. (CY): 0
Seed Width (FT):	Seed Area (SY):

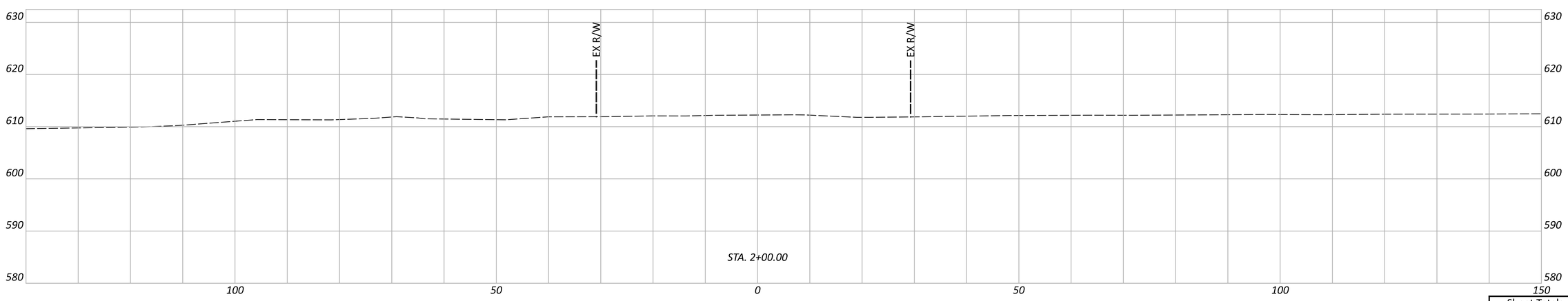

Sheet Totals		
Seeding	Cut	Fill

CROSS SECTIONS - ALTERNATIVE 4
HICKS AVE. - STA. 2+00 TO STA. 4+00

DESIGN AGENCY

HDR

DESIGNER
MJL

REVIEWER
PJD 02/21/25

PROJECT ID
SYMMES RD

SHEET P.109 TOTAL 115

BUT-SYMMES

MODEL: 00000_GX423 PAPERSIZE: 34x22 (in.) DATE: 3/31/2025 TIME: 2:13:04 PM USER: MLORENZ
pw:\\pwhdruseas01:HDR_US_East_01\Documents\Butler_County_Transportation_Improvement_District_-_Ohio\BCTID-SymmesRd_Grd_Separation\6.0_CAD_BIM\6.2_WIP\01_Design\000000\400-Engineering\Roadway\Sheets\Alt 4 Symmes Road Cross Sections

BUT-SYMMES

MODEL: 00000_GX424 PAPERSIZE: 34x22 (in.) DATE: 3/31/2025 TIME: 2:13:07 PM USER: MLORENZ
pw:\\pwhdruseas01:HDR_US_East_01\Documents\Butler_County_Transportation_Improvement_District_-_Ohio\BCTID-SymmesRd_Grd_Separation\6.0_CAD_BIM\6.2_WIP\01_Design\000000\400-Engineering\Roadway\Sheets\Alt 4 Symmes Road Cross Sections

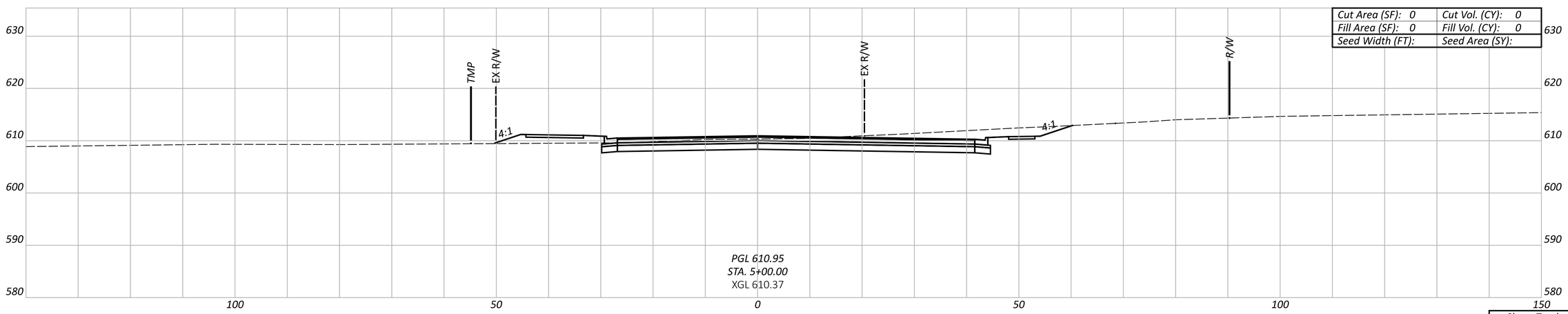

Cut Area (SF): 0	Cut Vol. (CY): 0
Fill Area (SF): 0	Fill Vol. (CY): 0
Seed Width (FT):	Seed Area (SY):

Sheet Totals		
Seeding	Cut	Fill

CROSS SECTIONS - ALTERNATIVE 4
HICKS AVE. - STA. 5+00

DESIGN AGENCY

HDR

DESIGNER
MJL

REVIEWER
PJD 02/21/25

PROJECT ID
SYMMES RD

SHEET P.110 TOTAL 115

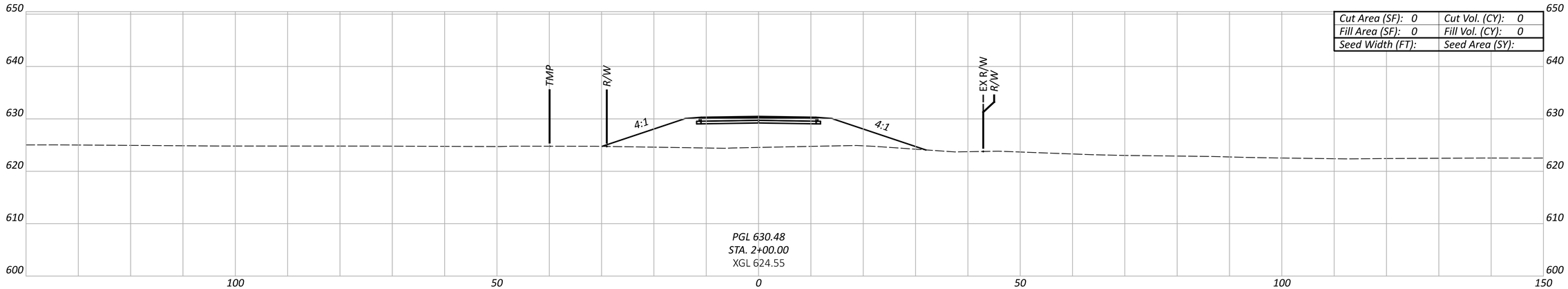

Cut Area (SF): 0	Cut Vol. (CY): 0
Fill Area (SF): 0	Fill Vol. (CY): 0
Seed Width (FT):	Seed Area (SY):

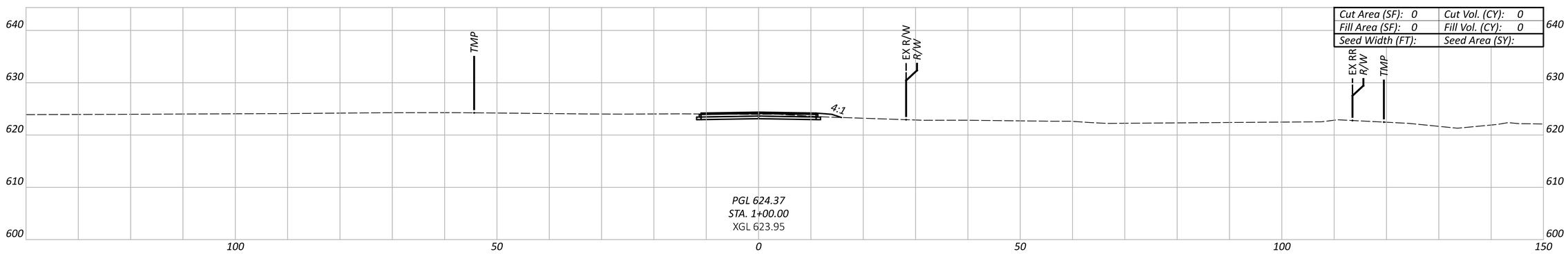

Cut Area (SF): 0	Cut Vol. (CY): 0
Fill Area (SF): 0	Fill Vol. (CY): 0
Seed Width (FT):	Seed Area (SY):

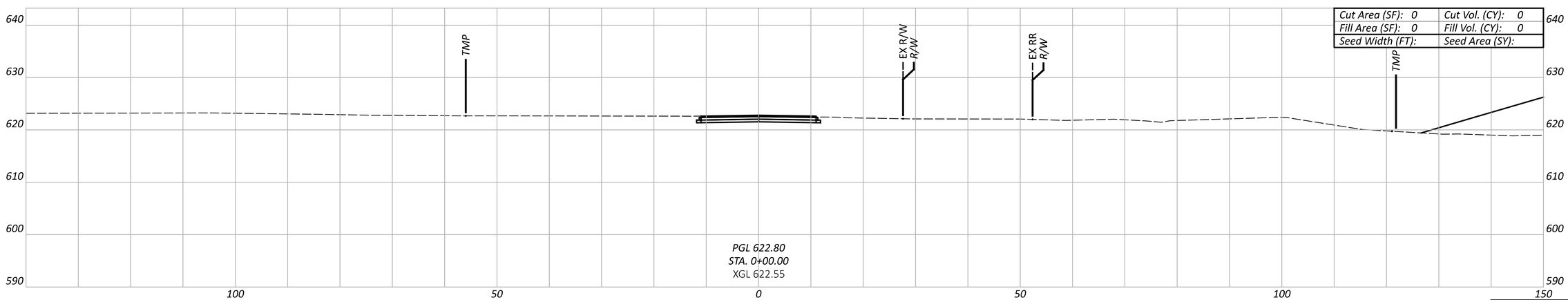

Cut Area (SF): 0	Cut Vol. (CY): 0
Fill Area (SF): 0	Fill Vol. (CY): 0
Seed Width (FT):	Seed Area (SY):

Sheet Totals		
Seeding	Cut	Fill

CROSS SECTIONS - ALTERNATIVE 4
COMMERCIAL DR. 1 - STA. 0+00 TO STA. 2+00

DESIGN AGENCY

HDR

DESIGNER
MJL

REVIEWER
PJD 02/21/25

PROJECT ID
SYMMES RD

SHEET P.111 TOTAL 115

BUT-SYMMES

MODEL: 00000_GX425 PAPERSIZE: 34x22 (in.) DATE: 3/31/2025 TIME: 2:13:08 PM USER: MLORENZ
pw:\\pwhdruseas01:HDR_US_East_01\Documents\Butler_County_Transportation_Improvement_District_-_Ohio\BCTID-SymmesRd_Grd_Separation\6.0_CAD_BIM\6.2_WIP\01_Design\000000\400-Engineering\Roadway\Sheets\Alt 4 Symmes Road Cross Sections

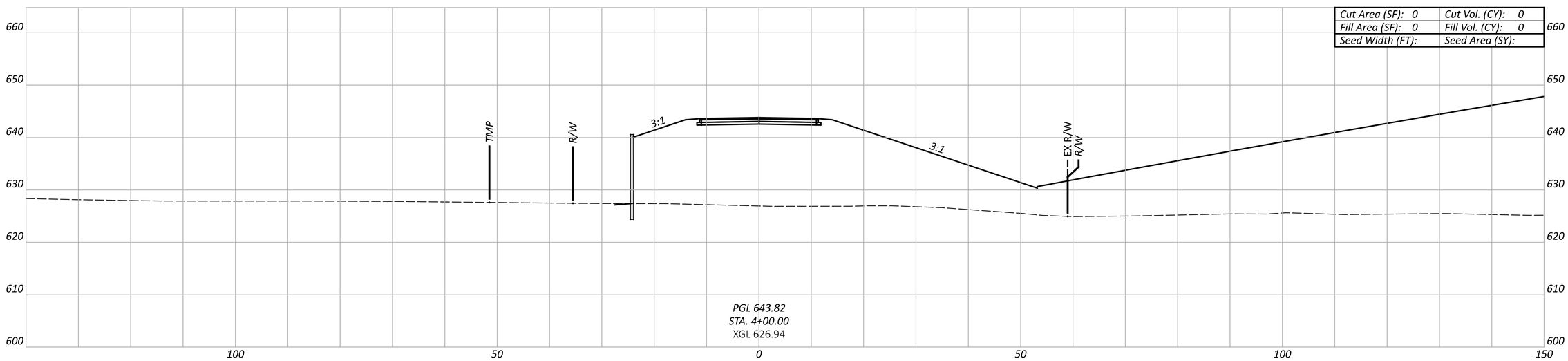

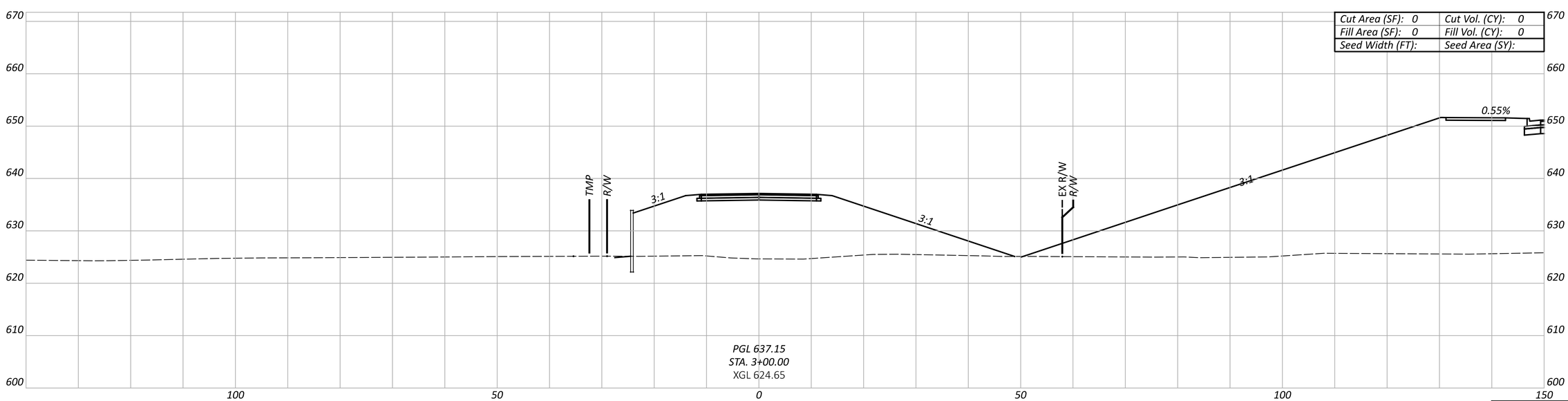

Sheet Totals		
Seeding	Cut	Fill

CROSS SECTIONS - ALTERNATIVE 4
COMMERCIAL DR. 1 - STA. 3+00 TO STA. 4+00

DESIGN AGENCY

HDR

DESIGNER
MJL

REVIEWER
PJD 02/21/25

PROJECT ID
SYMMES RD

SHEET P.112 TOTAL 115

BUT-SYMMES

MODEL: 00000_GX426 PAPERSIZE: 34x22 (in.) DATE: 3/31/2025 TIME: 2:13:12 PM USER: MLORENZ
pw:\\pwhdruseas01:HDR_US_East_01\Documents\Butler_County_Transportation_Improvement_District__-_Ohio\BCTID-SymmesRd_Grd_Separation\6.0_CAD_BIM\6.2_WIP\01_Design\000000\400-Engineering\Roadway\Sheets\Alt 4 Symmes Road Cross Sections

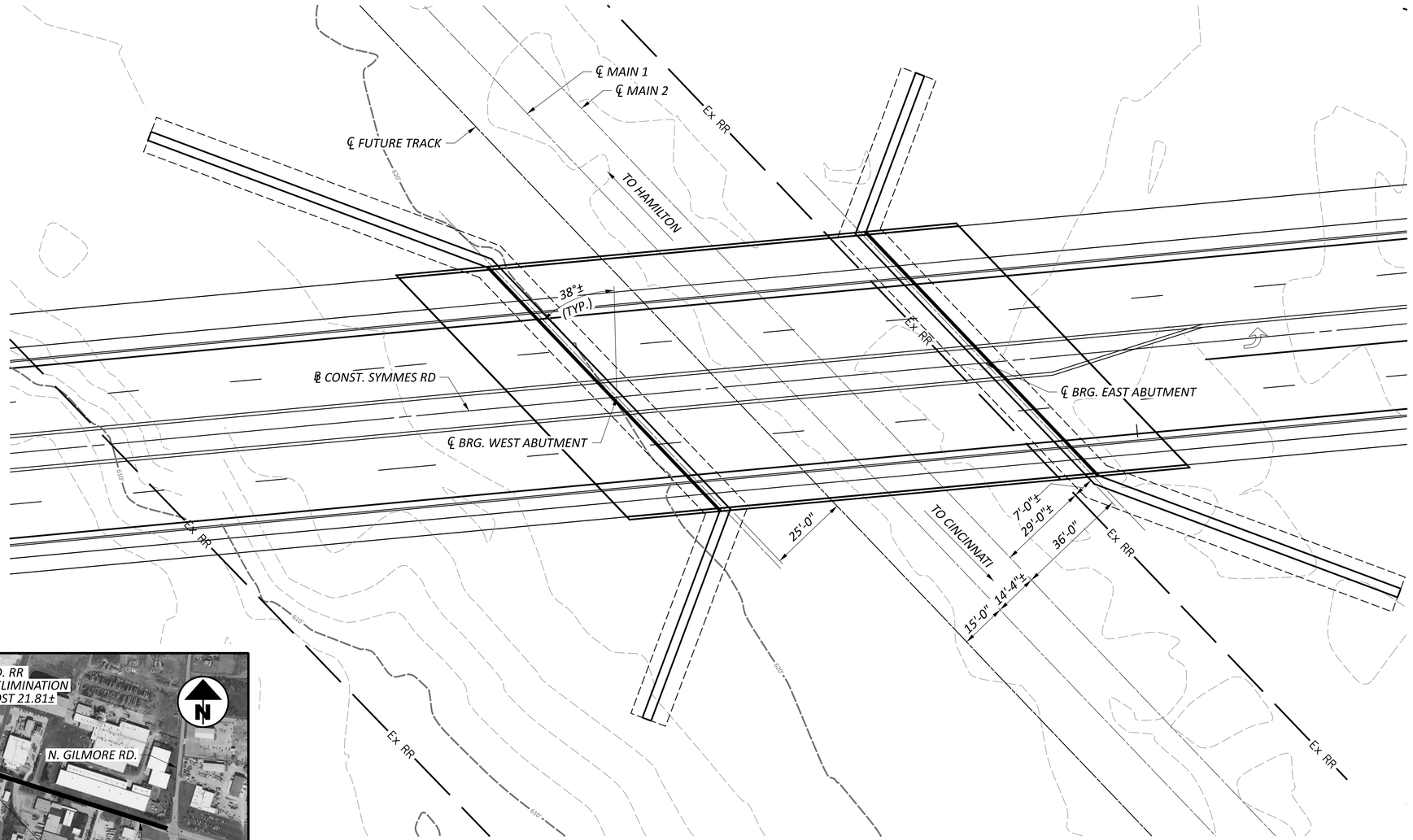

PLAN - ALTERNATIVE 4

0 10' 20' 40'

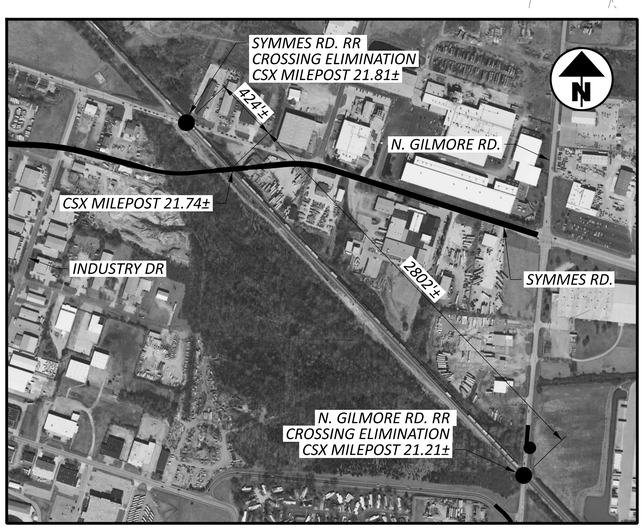

LOCATION MAP

NO SCALE

BUTLER CO. SYMMES RD GRADE SEPARATION
BRIDGE NO. XXX-XX-XX.XX
PRELIMINARY PLAN VIEW - ALTERNATIVE 4

SFN	TBD
DESIGN AGENCY	HDR
DESIGNER	DGJ
CHECKER	DWW
REVIEWER	PHF 2-25-25
PROJECT ID	SYMMES RD
SUBSET	1
TOTAL	2
SHEET	P.113
TOTAL	115

BUT-SYMMES

MODEL: Plan - ALT 4 PAPERSIZE: 34x22 (in.) DATE: 3/31/2025 TIME: 2:13:44 PM USER: MLORENZ
pw:\\pwhdruseas01:HDR_US_East_01\Documents\Butler_County_Transportation_Improvement_District_-_Ohio\BCTID-SymmesRd_Grd_Separation\6.0_CAD_BIM\6.2_WIP\01_Design\000000\960-Exhibits\20241023_Bridge Exhibits for CSX\20231023_Symmes Rd_Bridge Exhibits.dgn

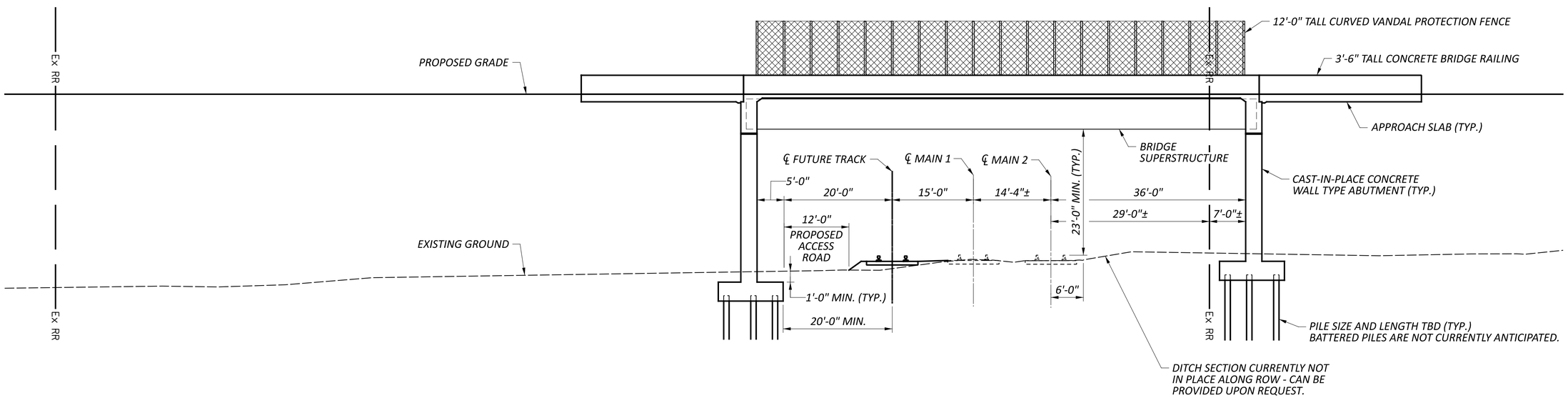

TYPICAL ELEVATION

(WITH FUTURE TRACK AND PROPOSED ACCESS ROAD)
(CUT PERPENDICULAR TO ℄ OF EXISTING TRACKS)

0 10'
5' 20'

NOTES:

1. *IT IS NOT FEASIBLE TO CLEAR SPAN CSX PROPERTY DUE TO GEOMETRIC CONSTRAINTS AND THE OVERALL WIDTH OF THE CSX RIGHT OF WAY WITHIN THE PROJECT LIMITS.*
2. *THE PROPOSED ABUTMENTS ARE LOCATED TO PROVIDE ADEQUATE HORIZONTAL CLEARANCE TO EXISTING AND PROPOSED FUTURE TRACKS. DUE TO GENERAL DESIGN REQUIREMENTS THE ABUTMENTS ARE EXPECTED TO QUALIFY AS HEAVY CONSTRUCTION, AS DEFINED IN THE CSX PUBLIC PROJECT MANUAL. CRASH WALLS ARE NOT ANTICIPATED.*
3. *EXISTING UTILITIES ARE NOT SHOWN. THE LOCATION OF EXISTING UTILITIES WILL BE COORDINATED AND INCORPORATED INTO THE PLANS DURING FINAL DESIGN.*

BUTLER CO. SYMMES RD GRADE SEPARATION
BRIDGE NO. XXX-XX-XX.XX
PRELIMINARY TYPICAL ELEVATION VIEW - ALTERNATIVE 4

SFN	TBD
DESIGN AGENCY	HDR
DESIGNER	JML
CHECKER	DWW
REVIEWER	PHF 2-25-25
PROJECT ID	SYMMES RD
SUBSET	2
TOTAL	2
SHEET	P.114
TOTAL	115

BUT-SYMMES

MODEL: Section - ALT 4 PAPERSIZE: 34x22 (in.) DATE: 3/31/2025 TIME: 2:13:51 PM USER: MLORENZ
pw:\\pwhdruseas01:HDR_US_East_01\Documents\Butler_County_Transportation_Improvement_District_-_Ohio\BCTID-SymmesRd_Grd_Separation\6.0_CAD_BIM\6.2_WIP\01_Design\000000\960-Exhibits\20241023_Bridge Exhibits for CSX\20231023_Symmes Rd_Bridge Exhibits.dgn

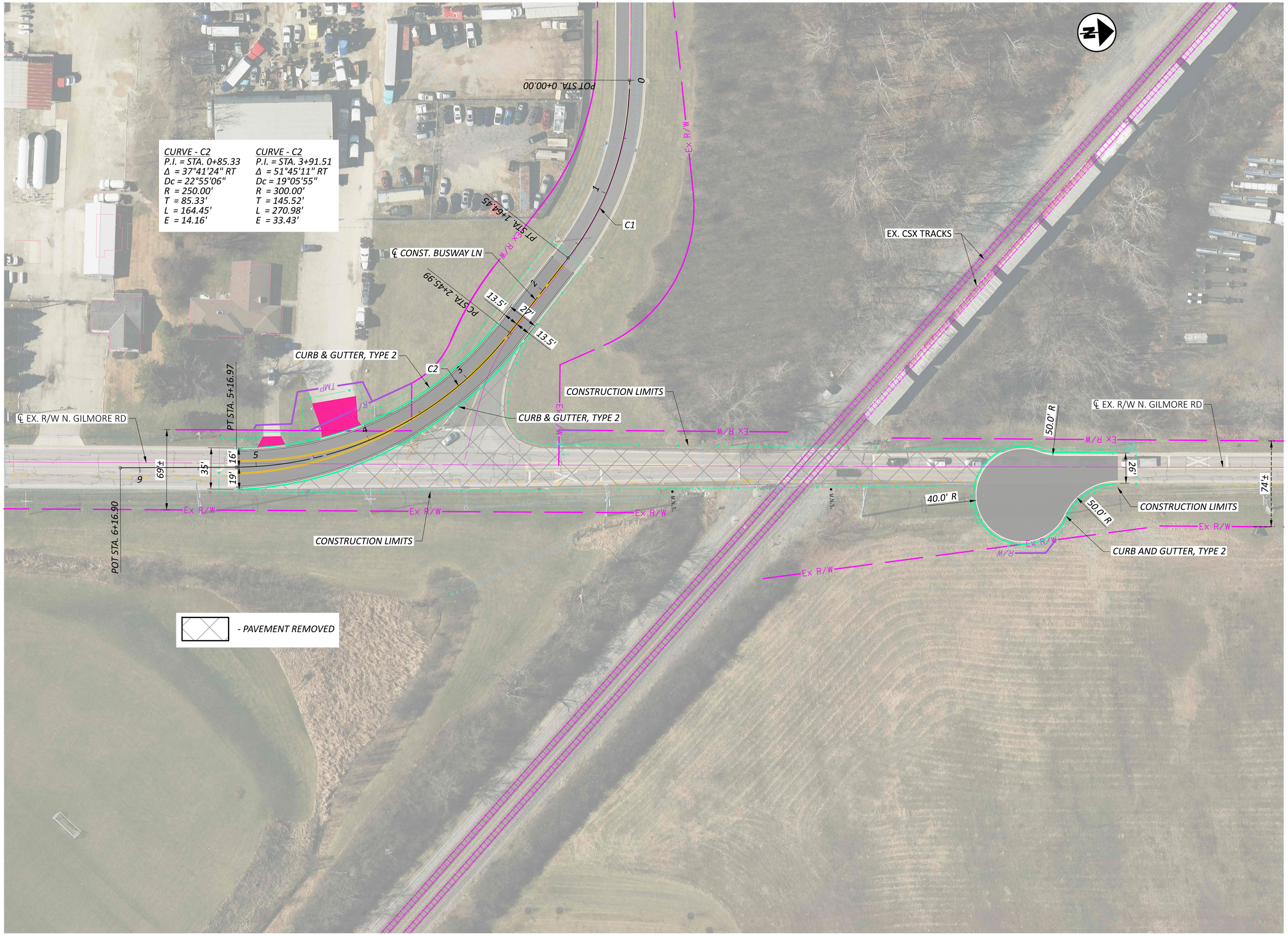

HORIZONTAL SCALE IN FEET
0 10 20 40

N GILMORE RD RAILWAY CROSSING CLOSURE

DESIGN AGENCY
HDR

DESIGNER
MJL

REVIEWER
PJD 02/21/25

PROJECT ID
SYMMES RD

SHEET P.115 TOTAL 115

BUT-SYMMES

MODEL: Gillmore Rd - Plan 1 [Sheet] PAPERSIZE: 34x22 (in.) DATE: 3/31/2025 TIME: 2:14:16 PM USER: MLORENZ
pw:\\pwhdruseas01:HDR_US_East_01\Documents\Butler_County_Transportation_Improvement_District_-_Ohio\BCTID-SymmesRd_Grd_Separation\6.0_CAD_BIM\6.2_WIP\01_Design\000000\400-Engineering\Roadway\Sheets\Gillmore Rd Plan